CVM Manufacturing Works is one of the leading manufacturers of ventilation equipment in Russia.

We offer creative solutions in the sphere of smoke removal, industrial ventilation, air conditioning and manufacturing of ventilation system components.

Our staff is focused on offering innovative developments and fine quality of production in full conformity with declared characteristics of performance, reliability, energy efficiency and noise level reduction.

Our company timely responds to market changes, which gives us considerable assistance in our market-oriented behavior being a part of our success strategy.

We deliberately stay focused on market segments where we can introduce some value and carry on with company growth. This strategy substantially relies on the most essential assets we have – people and production. Together with our talented staff which is familiar with our production range and understands customer needs, we provide the most flexible approach to the market requirements.

Complete range of items, certification, high production effectiveness, performance and wide model range make us able to rival any competitor and offer right solutions to our partners.

The range of products presented below demonstrates only a part of opportunities we offer. Our managers and engineers are willing to help you to learn more.

www.cvm.ru

GENERAL VENTILATION SYSTEM EQUIPMENT

CENTRAL AIR-CONDITIONERS

HEAT EXCHANGERS

DRY COOLERS

SMOKE VENTILATION SYSTEM EQUIPMENT

APPENDICES

CVM®
www.cvm.ru

GENERAL VENTILATION SYSTEM EQUIPMENT

CVM Manufacturing Works produces 7 lines of ducted fans: 5 lines of fans with embedded industrial induction motor, and 2 lines of fans with remote motor; 3 lines of radial and axial roof fans; 4 lines of radial fans, and 3 lines of axial fans.

Besides CVM Manufacturing Works produces 3 types of warm air curtain, complex AHUs (in a case or without case), as well as Pod-mount heating and ventilation units.

All fans are certified by the TR and GOST-R Certification Systems.

No.	Item Name	Model	Climatic Version and Installation Category	Location
1	Roof radial fan	ВРКО (VRKO)	У1	Outdoor pursuant to GOST 15150-69
2	Roof radial fan	ВРКШ (VRKSh)	У1	
3	Roof axial fan	ВОКШ (VOKSh)	У1	
4	Radial fan	ВР-80-75 (VR-80-75)	У2	Outdoor under hood and indoor pursuant to GOST 15150-69
5	Radial fan	ВР-280-46 (VR-280-46)	У2	
6	Radial fan	ВР-140-40 (VR-140-40)	У2	
7	Radial fan	ВР-120-28 (VR-120-28)	У2	
8	Axial fan	ВО-12-300 (VO-12-300)	У2	
9	Axial fan	ВО-25-188 (VO-25-188)	У2	
10	Axial fan	ВО-30-160 (VO-30-160)	У2	
11	Ducted fan	ВРПН-НВК (VRPN-NVK)	У3	Indoor pursuant to GOST 15150-69
12	Ducted fan	ВРПП (ВИП(м)) (VRPP (VIP(m)))	У3	
13	Ducted fan	ВРКК (VRKK)	У3	
14	Ducted fan	ВРПВ-Н (VRPV-N)	У3	
15	Ducted fan	ВРПН-Н (VRPN-N)	У3	
16	Air curtain	ЗВВ (ZVV)	У3	
17	Air curtain	ЗИС (ZIS)	У3	
18	Air curtain	ЗВШ (ZVSh)	У3	
19	AHU	АВС (AVS)	У3	
20	AHU	СВАН (SVAN)	У3	
21	Pod-mount heating and ventilation unit	НОВА (NOVA)	У3	

CVM Manufacturing Works reserves the right to change the design of ventilation equipment as a part of continuous improvement process.

CVM Manufacturing Works optionally releases explosion-proof products.

(See more on page 158)

Explosion-proof feature is denoted by the character “B” (“V”).

Aerodynamic performance and noise characteristics of explosion-proof fans comply with characteristics of corresponding models with regular enclosure but may have different size and electric characteristics (power).

All explosion-proof fans are certified by the GOST-R and TR Certification Systems and have permission by the Federal Service for Environmental, Technological and Nuclear Supervision.

Aerodynamic Performance

Fans aerodynamic performance is defined in accordance with GOST 31353.3-2007 on an aerodynamic stand with inlet chamber and fan free outlet. Characteristics are represented by the total fan pressure versus air flow rate curves. Dynamic pressure corresponds to flange cross-section at the fan outlet. All fan characteristics correspond to standard atmospheric pressure and air temperature of 20 °C with atmospheric density of 1.2 kg/m^3.

Noise Performance

Noise characteristics are defined in accordance with GOST 31353.3-2007 and represented by the dBA values of adjusted sound-power levels on delivery side, suction side and through the housing walls (the last value applies only for the fans with embedded motor) in motor maximum efficiency mode. Sound power levels are 2-3dBA higher on the mode close to the fan maximum performance.

Sound power level L_{pi} in octave bands with geometric mean frequencies, when rotation speed is constant, is defined as follows: $L_{pi} = L_{pA} + AL_{pi}$

ΔL_{pi} values for ВРПП (VRPP) and ВРКК (VRKK) fans are presented in the table below:

ΔL_{pi} values	Octave bandwidth [Hz]							
	63	125	250	500	1000	2000	4000	8000
ΔL_{pi} [dB], (at the inlet)	– 10	– 7	– 13	0	– 7	– 8	– 10	– 15
ΔL_{pi} [dB], (at the outlet)	– 8	– 6	– 11	– 4	– 6	– 5	– 10	– 16
ΔL_{pi} [дБ] (through the walls)	6	8	– 3	– 4	– 8	– 7	– 11	– 14
ΔL_{pi} [дБ] (through the walls) for VIP	5	0	– 5	– 5	– 7	– 7	– 8	– 12

Applied electric motors

Degree of protection for the applied electric motors shall not be lower than IP54.

Manufactured in compliance with TU 4861-003-64600223-13

100 – 16000 m³/hour

- Backward-curved blades impeller
- Low noise and energy consumption level / Outflow is distributed across the whole duct section
- Easy-to-clean surface of impeller

Speed may be adjusted by switching the motor poles (optional) or using frequency converter.

Increased pressure developed by the fans in small and medium cross-section ducts.

Motor power limitation free operation within the whole range of developed capacity for the fans with small and medium duct cross-sections

Galvanized steel housing, weld steel impeller with powder paint coating

Impeller direct drive from the domestic or West-European motor.

Considerable reduction of noise level through the walls by slight expansion of ВИП (VIP) fans housing.

Fans may be delivered complete with flexible connectors

Built-in motor thermal protection (optional)
Impeller dynamic balancing. The fan is operational in any position. Fan design is protected by the Russian Patent of Invention and useful Model Certificate.

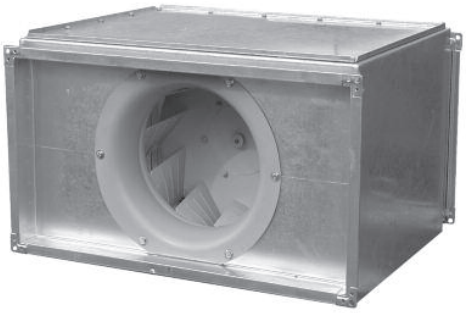

Automatic Control System see p.182.

Explosion-proof version is available.

Fans are denoted as follows:

ВРПП 60x35 Б В 3 – У3
- У3 – Climatic version;
- 3 – Power grid: 1 – single-phase; 3 – three-phase;
- В – Special enclosure version (Explosion-proof)
- В – Aerodynamic power index (А,Б,В,Г);
- 60x35 – Duct cross-section [cm];
- ВРПП – Fan type (radial, rectangular, direct-flow, ducted)

Explosion-proof enclosure version in accordance with TU 4861 – 010 – 64600223 – 11 is available.

Fans are denoted as follows:

ВИП 60x35 Б В 3 – У3
- У3 – Climatic version;
- 3 – Power grid: 1 – single-phase; 3 – three-phase;
- В – Special enclosure version (Explosion-proof);
- Б – Aerodynamic power index (А, Б, В, Г);
- 60x35 – Duct cross-section [cm];
- ВИП – Fan type (rectangular fan in isolated case).

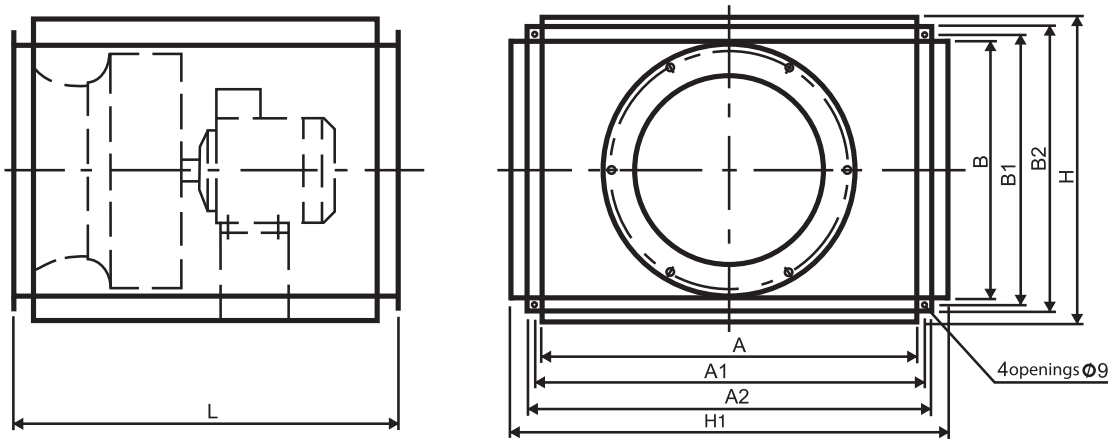

Fig. 1

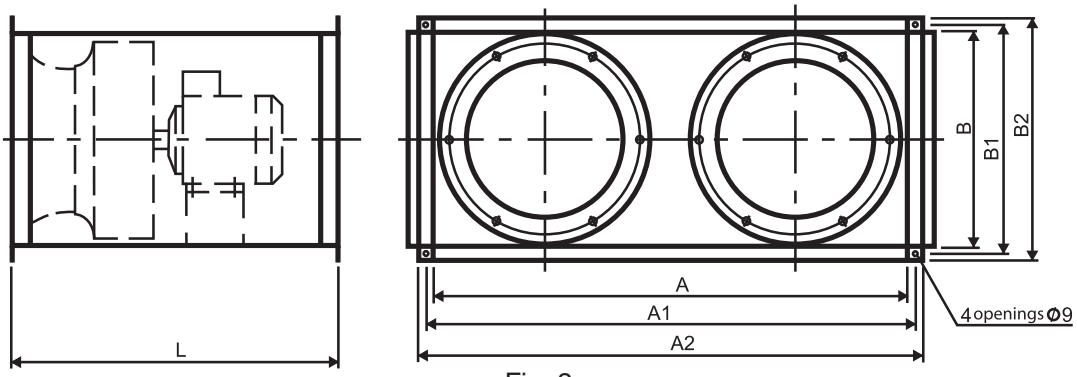

Fig. 2

No.	Fan type	Fig.	Dimensions [mm]									Weight [kg]
			A	B	A1	B1	A2	B2	L	H	H1	
1	ВРПП (ВИП) 30x15А	1	300	150	320	170	340	190	380	210 (260)	--- (350)	13,5 (16,5)
2	ВРПП (ВИП) 30x15Б	1	300	150	320	170	340	190	380	210 (260)	--- (350)	15,3 (18,3)
3	ВРПП (ВИП) 40x20А	1	400	200	420	220	440	240	400	260 (310)	--- (450)	15,6 (20,6)
4	ВРПП (ВИП) 40x20Б	1	400	200	420	220	440	240	400	260 (310)	--- (450)	17,6 (22,6)
5	ВРПП (ВИП) 40x20В	1	400	200	420	220	440	240	400	260 (310)	--- (450)	20 (25)
6	ВРПП (ВИП) 50x25А	1	500	250	520	270	540	290	430	290 (340)	--- (550)	22 (30)
7	ВРПП (ВИП) 50x25Б	1	500	250	520	270	540	290	430	290 (340)	--- (550)	20 (28)
8	ВРПП (ВИП) 50x25В	1	500	250	520	270	540	290	430	290 (340)	--- (550)	20,5 (28,5)
9	ВРПП (ВИП) 50x25Г	1	500	250	520	270	540	290	430	290 (340)	--- (550)	20,5 (28,5)
10	ВРПП (ВИП) 50x30А	1	500	300	520	320	540	340	500	330 (380)	---(550)	25 (35)
11	ВРПП (ВИП) 50x30Б	1	500	300	520	320	540	340	500	330 (380)	---(550)	22 (32)
12	ВРПП (ВИП) 50x30В	1	500	300	520	320	540	340	500	330 (380)	--- (550)	23,8 (33,8)
13	ВРПП (ВИП) 50x30Г	1	500	300	520	320	540	340	500	330 (380)	--- (550)	31,9 (41,9)
14	ВРПП (ВИП) 60x30А	1	600	300	620	320	640	340	500	330 (380)	--- (650)	36,8 (48,3)
15	ВРПП (ВИП) 60x30Б	1	600	300	620	320	640	340	500	330 (380)	--- (650)	24,6 (36,1)
16	ВРПП (ВИП) 60x30В	1	600	300	620	320	640	340	500	330 (380)	--- (650)	33,9 (45,4)
17	ВРПП (ВИП) 60x30Г	1	600	300	620	320	640	340	500	330 (380)	--- (650)	34,5 (46)
18	ВРПП (ВИП) 60x35А	1	600	350	620	370	640	390	500	380 (430)	--- (650)	38,1 (51,1)
19	ВРПП (ВИП) 60x35Б	1	600	350	620	370	640	390	500	380 (430)	--- (650)	36,2 (49,2)
20	ВРПП (ВИП) 60x35В	1	600	350	620	370	640	390	500	380 (430)	--- (650)	36,5 (49,5)
21	ВРПП (ВИП) 60x35Г	1	600	350	620	370	640	390	500	380 (430)	--- (650)	40,6 (53,6)
22	ВРПП (ВИП) 70x40А	1	700	400	720	420	740	440	580	430 (480)	---(750)	46,4 (64,4)
23	ВРПП (ВИП) 70x40Б	1	700	400	720	420	740	440	580	400 (450)	--- (750)	43,5 (61,5)
24	ВРПП (ВИП) 70x40В	1	700	400	720	420	740	440	580	400 (450)	---(750)	49 (67)
25	ВРПП (ВИП) 70x40Г	1	700	400	720	420	740	440	580	400 (450)	--- (750)	43,2 (61,2)
26	ВРПП (ВИП) 80x50А	1	800	500	830	530	860	560	630	500 (550)	--- (850)	47,9 (73,9)
27	ВРПП (ВИП) 80x50Б	1	800	500	830	530	860	560	630	530 (580)	--- (850)	61,7 (87,7)
28	ВРПП (ВИП) 80x50В	1	800	500	830	530	860	560	630	500 (550)	--- (850)	68,6 (94,6)
29	ВРПП (ВИП) 80x50Г	1	800	500	830	530	860	560	630	500 (550)	--- (850)	79,6 (105,5)
30	ВРПП (ВИП) 100x50А	1	1000	500	1030	530	1060	560	720	530 (580)	--- (1050)	70 (102)
31	ВРПП (ВИП) 100x50Б	1	1000	500	1030	530	1060	560	650	500 (550)	--- (1050)	81,8 (113,8)
32	ВРПП (ВИП) 100x50В	1	1000	500	1030	530	1060	560	650	500 (550)	--- (1050)	72,6 (105,6)
33	ВРПП (ВИП) 100x50Г	2	1000	500	1030	530	1060	560	650	---	---	148

CHARACTERISTICS SUMMARY DIAGRAM

100 – 3800 m³/hour

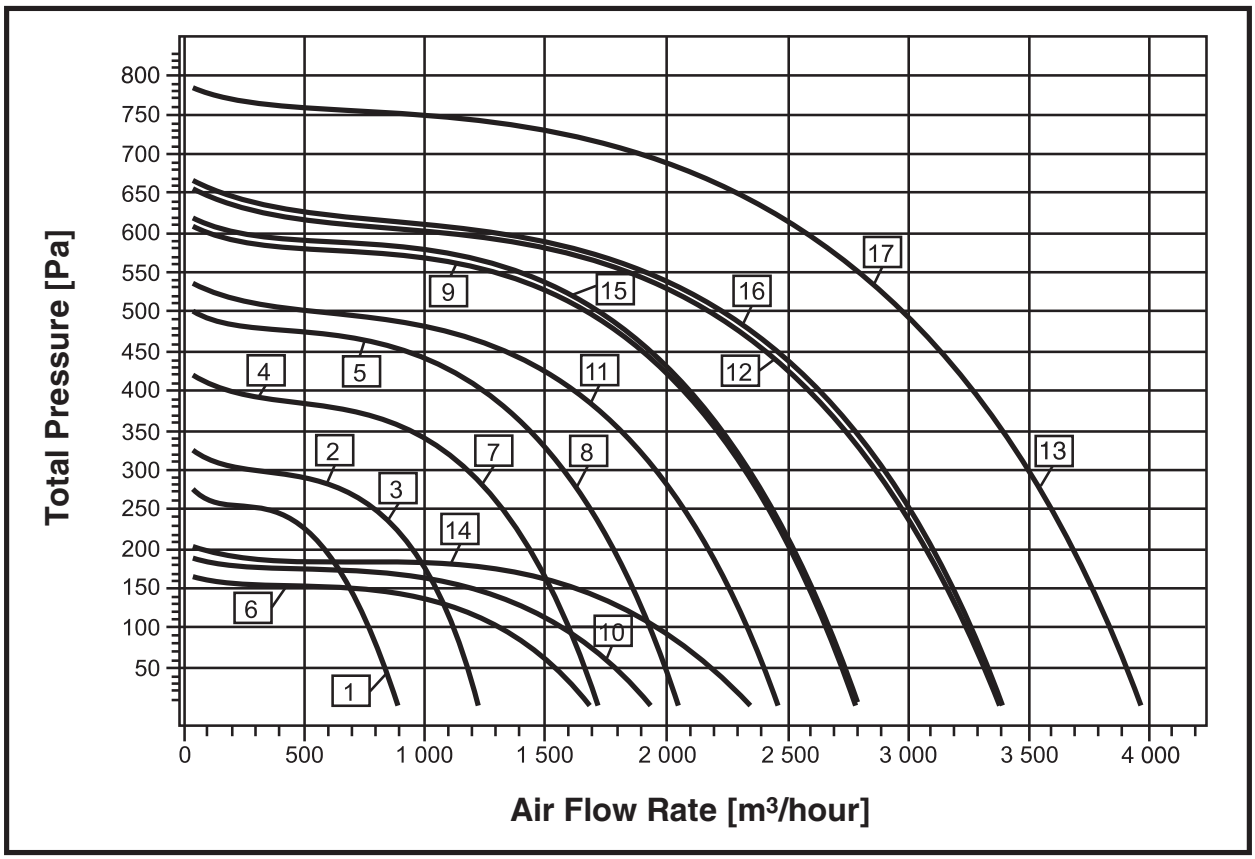

№	Fan Type	Electric Motor Type		Frequency n [min⁻¹]	Power N_y [kW]	Adjusted Sound Power Level L_{pA} [dB(A)]		
		Three-phase	Single-phase			At the Inlet	At the Outlet	Through the walls
1	ВРПП (ВИП) 30x15А	АИС56А2	АИСЕ56А2	2910	0,09	68	68	55 (45)
2	ВРПП (ВИП) 30x15Б	АИР56А2	АИРЕ56А2	2825	0,18	72	72	59 (49)
3	ВРПП (ВИП) 40x20А	АИР56А2	АИРЕ56А2	2825	0,18	72	72	59 (49)
4	ВРПП (ВИП) 40x20Б	АИР56В2	АИРЕ56В2	2875	0,25	75	75	62 (52)
5	ВРПП (ВИП) 40x20В	АИР63А2	АИРЕ63А2	2895	0,37	76	76	63 (53)
6	ВРПП (ВИП) 50x25А	АИС56В4	АИСЕ56В4	1450	0,09	67	67	54 (44)
7	ВРПП (ВИП) 50x25Б	АИР56В2	АИРЕ56В2	2875	0,25	75	75	62 (52)
8	ВРПП (ВИП) 50x25В	АИР63А2	АИРЕ63А2	2895	0,37	76	76	63 (53)
9	ВРПП (ВИП) 50x25Г	АИР63В2	АИРЕ63В2	2880	0,55	80	80	67 (57)
10	ВРПП (ВИП) 50x30А	АИР56А4	АИРЕ56А4	1430	0,12	68	68	55 (45)
11	ВРПП (ВИП) 50x30Б	АИР63В2	АИРЕ63В2	2895	0,55	78	78	65 (55)
12	ВРПП (ВИП) 50x30В	АИР71А2	АИРЕ71А2	2880	0,75	82	82	69 (59)
13	ВРПП (ВИП) 50x30Г	АИР71В2	---	2915	1,1	83	83	70 (60)
14	ВРПП (ВИП) 60x30А	АИР56В4	АИРЕ56В4	1430	0,18	70	70	57 (47)
15	ВРПП (ВИП) 60x30Б	АИР63В2	АИРЕ63В2	2895	0,55	80	80	67 (57)
16	ВРПП (ВИП) 60x30В	АИР71А2	АИРЕ71А2	2895	0,75	82	82	69 (59)
17	ВРПП (ВИП) 60x30Г	АИР71В2	---	2915	1,1	83	83	70 (60)

CHARACTERISTICS SUMMARY DIAGRAM

400 – 16000 m³/hour

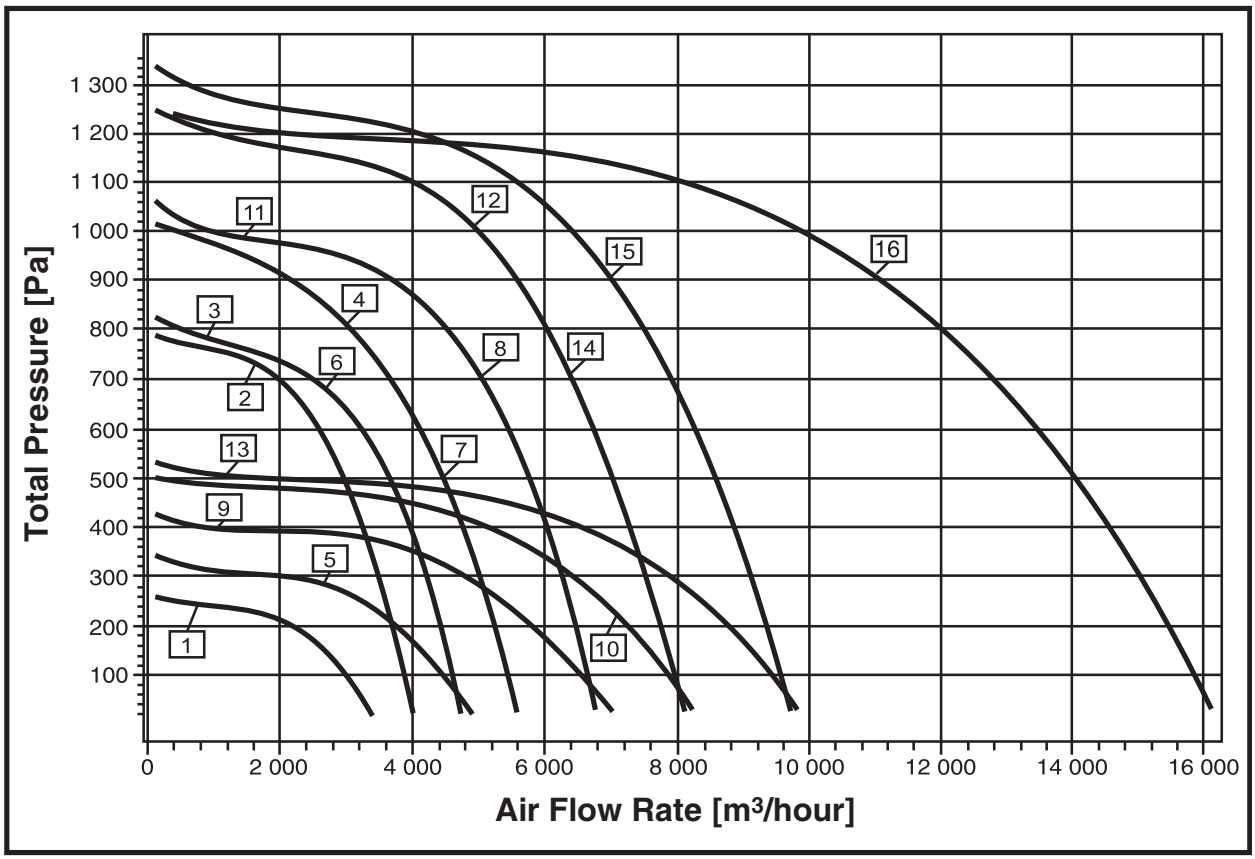

№	Fan Type	Electric Motor Type		Frequency n [min⁻¹]	Power N_y [kW]	Adjusted Sound Power Level L_{pA} [dB(A)]		
		Three-phase	Single-phase			At the Inlet	At the Outlet	Through the walls
1	ВРПП (ВИП)-60x35А	АИР63В4	АИРЕ71А4	1450	0,37	74	74	61 (51)
2	ВРПП (ВИП)-60x35Б	АИР71В2	---	2915	1,1	83	83	70 (60)
3	ВРПП (ВИП)-60x35В	АИР80А2	---	2880	1,5	85	85	72 (62)
4	ВРПП (ВИП)-60x35Г	АИР80А2	---	2890	1,5	86	86	73 (63)
5	ВРПП (ВИП)-70x40А	АИР71А4	АИРЕ71В4	1450	0,55	77	77	64 (54)
6	ВРПП (ВИП)-70x40Б	АИР80А2	---	2880	1,5	85	85	72 (62)
7	ВРПП (ВИП)-70x40В	АИР80А2	---	2890	1,5	86	86	73 (63)
8	ВРПП (ВИП)-70x40Г	АИР80В2	---	2915	2,2	89	89	76 (66)
9	ВРПП (ВИП)-80x50А	АИР80А4	---	1460	1,1	81	81	68 (58)
10	ВРПП (ВИП)-80x50Б	АИР80В4	---	1450	1,5	82	82	69 (59)
11	ВРПП (ВИП)-80x50В	АИР80В2	---	2915	2,2	89	89	76 (66)
12	ВРПП (ВИП)-80x50Г	АИР90L2	---	2900	3	90	90	77 (67)
13	ВРПП (ВИП)-100x50А	АИР90L4	---	1440	2,2	84	84	71 (61)
14	ВРПП (ВИП)-100x50Б	АИР90L2	---	2900	3	90	90	77 (67)
15	ВРПП (ВИП)-100x50В	АИР100S2	---	2900	4	92	92	79 (69)
16	ВРПП (ВИП)-100x50Г	2xАИР90L2	---	2900	2 x 3	93	93	80

Manufactured in accordance with TU 4861-003-64600223-13

100 – 9500 m³/hour

- Impeller with backward-curved blades
- Low noise level and energy consumption
- Outflow distribution across the whole duct section
- Easy-to-clean impeller surface

Increased pressure developed by fans with small and medium duct sections.

Operation without restriction of the motor power in the whole range of developed capacity for the fans with small and medium duct sections.

Galvanized steel housing, Welded steel impeller with powder paint coating.

Fans may be delivered complete with flexible connectors

Considerable reduction of noise level through the walls and at the fan inlet.

Impeller dynamic balancing. The fan is functional in any position.

Fans are denoted as follows:

ВИПм 60x35 Б В 3 – У3

- У3 – Climatic version;
- 3 – Power grid: 1 – single-phase; 3 – three-phase;
- В – Special enclosure version (Explosion-proof);
- Б – Aerodynamic power index (А, Б, В, Г);
- 60x35 – Duct cross-section [cm];
- ВИПм – Upgraded;
- ВИП – Fan type (fan in isolated housing, rectangular).

Automatic Control System see p.182.

Explosion-proof version is available.

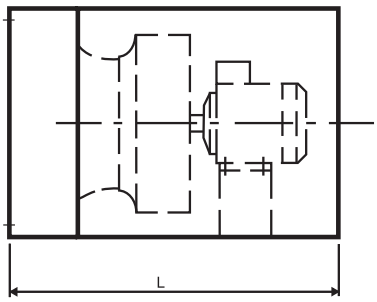

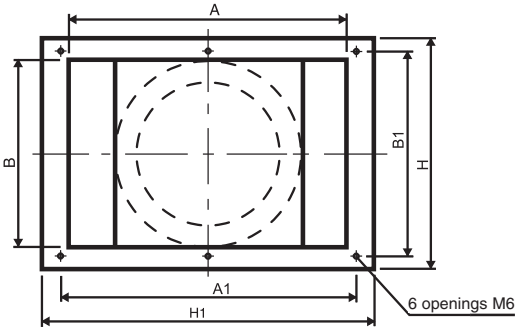

№	Fan Type	Dimensions [mm]							Weight [kg]
		A	B	A1	B1	L	H	H1	
1	ВИПм-30x15А	300	150	320	170	526	270	400	17,2
2	ВИПм-30x15Б	300	150	320	170	526	270	400	18,2
3	ВИПм-40x20А	400	200	420	220	620	320	500	22,4
4	ВИПм-40x20Б	400	200	420	220	620	320	500	24,4
5	ВИПм-40x20В	400	200	420	220	620	320	500	26,8
6	ВИПм-50x25А	500	250	520	270	670	340	600	32,8
7	ВИПм-50x25Б	500	250	520	270	670	340	600	30,8
8	ВИПм-50x25В	500	250	520	270	670	340	600	31,5
9	ВИПм-50x25Г	500	250	520	270	670	340	600	31,5
10	ВИПм-50x30А	500	300	520	320	750	390	600	36
11	ВИПм-50x30Б	500	300	520	320	750	390	600	34,2
12	ВИПм-50x30В	500	300	520	320	750	390	600	37,2
13	ВИПм-50x30Г	500	300	520	320	750	390	600	45
14	ВИПм-60x30А	600	300	620	320	790	390	700	37,3
15	ВИПм-60x30Б	600	300	620	320	790	390	700	35,1
16	ВИПм-60x30В	600	300	620	320	790	390	700	45,6
17	ВИПм-60x30Г	600	300	620	320	790	390	700	45,3
18	ВИПм-60x35А	600	350	620	370	810	440	700	53,3
19	ВИПм-60x35Б	600	350	620	370	810	440	700	53,8
20	ВИПм-60x35В	600	350	620	370	810	440	700	54
21	ВИПм-60x35Г	600	350	620	370	810	440	700	58,2
22	ВИПм-70x40А	700	400	720	420	910	490	800	77,2
23	ВИПм-70x40Б	700	400	720	420	910	490	800	75,5
24	ВИПм-70x40В	700	400	720	420	910	490	800	75,8
25	ВИПм-70x40Г	700	400	720	420	910	490	800	81,2
26	ВИПм-80x50А	800	500	830	530	1030	590	900	106
27	ВИПм-80x50Б	800	500	830	530	1030	590	900	107,3
28	ВИПм-80x50В	800	500	830	530	1030	590	900	103,6
29	ВИПм-80x50Г	800	500	830	530	1030	590	900	105,6
30	ВИПм-100x50А	1000	500	1030	530	1080	590	1100	145
31	ВИПм-100x50Б	1000	500	1030	530	1080	590	1100	138,8
32	ВИПм-100x50В	1000	500	1030	530	1080	590	1100	148,4
33	ВИПм-100x50Г	1000	500	1030	530	1080	590	1100	150

CHARACTERISTICS SUMMARY DIAGRAM

100 – 4700 m³/hour

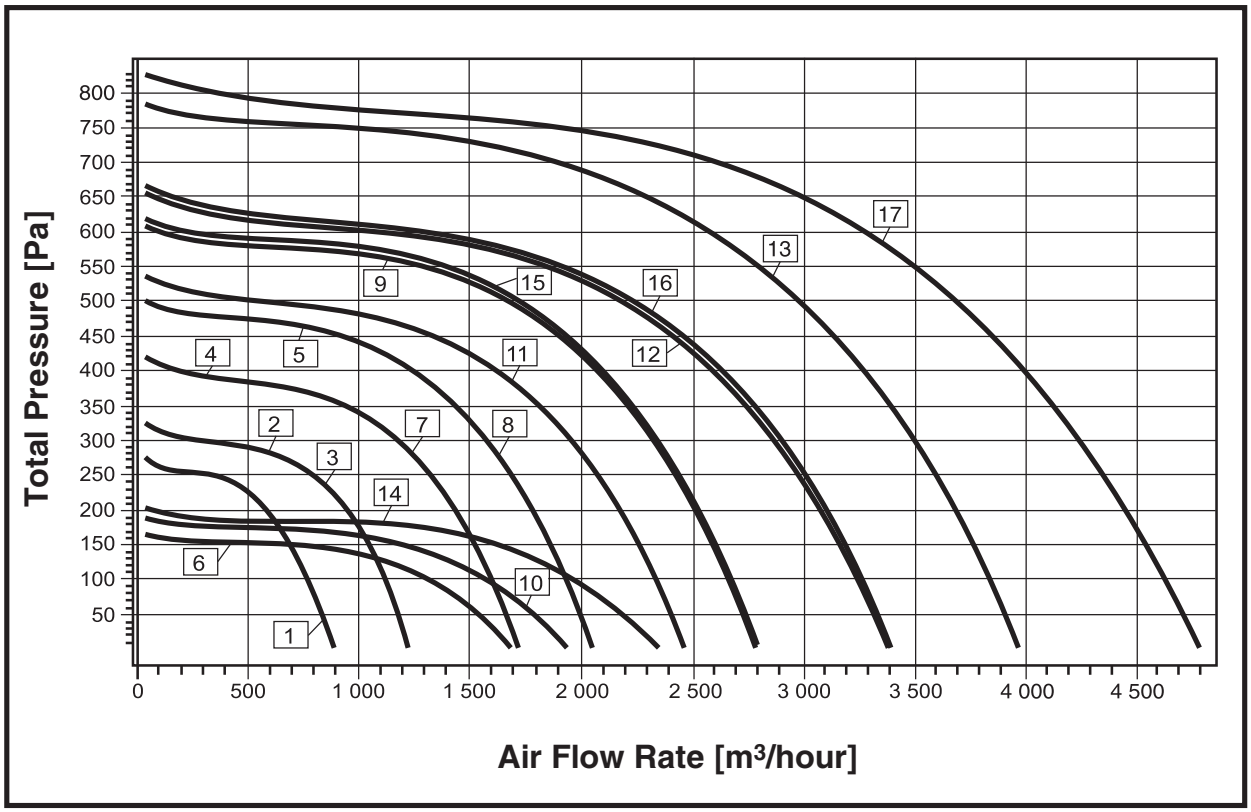

№	Fan Type	Electric Motor Type		Frequency n [min⁻¹]	Power N_y [kW]	Adjusted Sound Power Level L_{pA} [dB(A)]		
		Three-phase	Single-phase			At the Inlet	At the Outlet	Through the walls
1	ВИПм 30x15А	АИС56А2	АИСЕ56А2	2910	0,09	61	62	45
2	ВИПм 30x15Б	АИР56А2	АИРЕ56А2	2825	0,18	65	66	49
3	ВИПм 40x20А	АИР56А2	АИРЕ56А2	2825	0,18	65	66	49
4	ВИПм 40x20Б	АИР56В2	АИРЕ56В2	2875	0,25	68	69	52
5	ВИПм 40x20В	АИР63А2	АИРЕ63А2	2895	0,37	69	70	53
6	ВИПм 50x25А	АИС56В4	АИСЕ56В4	1450	0,09	60	61	44
7	ВИПм 50x25Б	АИР56В2	АИРЕ56В2	2875	0,25	68	69	52
8	ВИПм 50x25В	АИР63А2	АИРЕ63А2	2895	0,37	69	70	53
9	ВИПм 50x25Г	АИР63В2	АИРЕ63В2	2880	0,55	73	74	57
10	ВИПм 50x30А	АИР56А4	АИРЕ56А4	1430	0,12	61	62	45
11	ВИПм 50x30Б	АИР63В2	АИРЕ63В2	2895	0,55	71	72	55
12	ВИПм 50x30В	АИР71А2	АИРЕ71А2	2880	0,75	75	76	59
13	ВИПм 50x30Г	АИР71В2	---	2915	1,1	76	77	60
14	ВИПм 60x30А	АИР56В4	АИРЕ56В4	1430	0,18	63	64	47
15	ВИПм 60x30Б	АИР63В2	АИРЕ63В2	2895	0,55	73	74	57
16	ВИПм 60x30В	АИР71А2	АИРЕ71А2	2895	0,75	75	76	59
17	ВИПм 60x30Г	АИР80А2	---	2900	1,5	78	79	62

CHARACTERISTICS SUMMARY DIAGRAM

400 – 16000 m³/hour

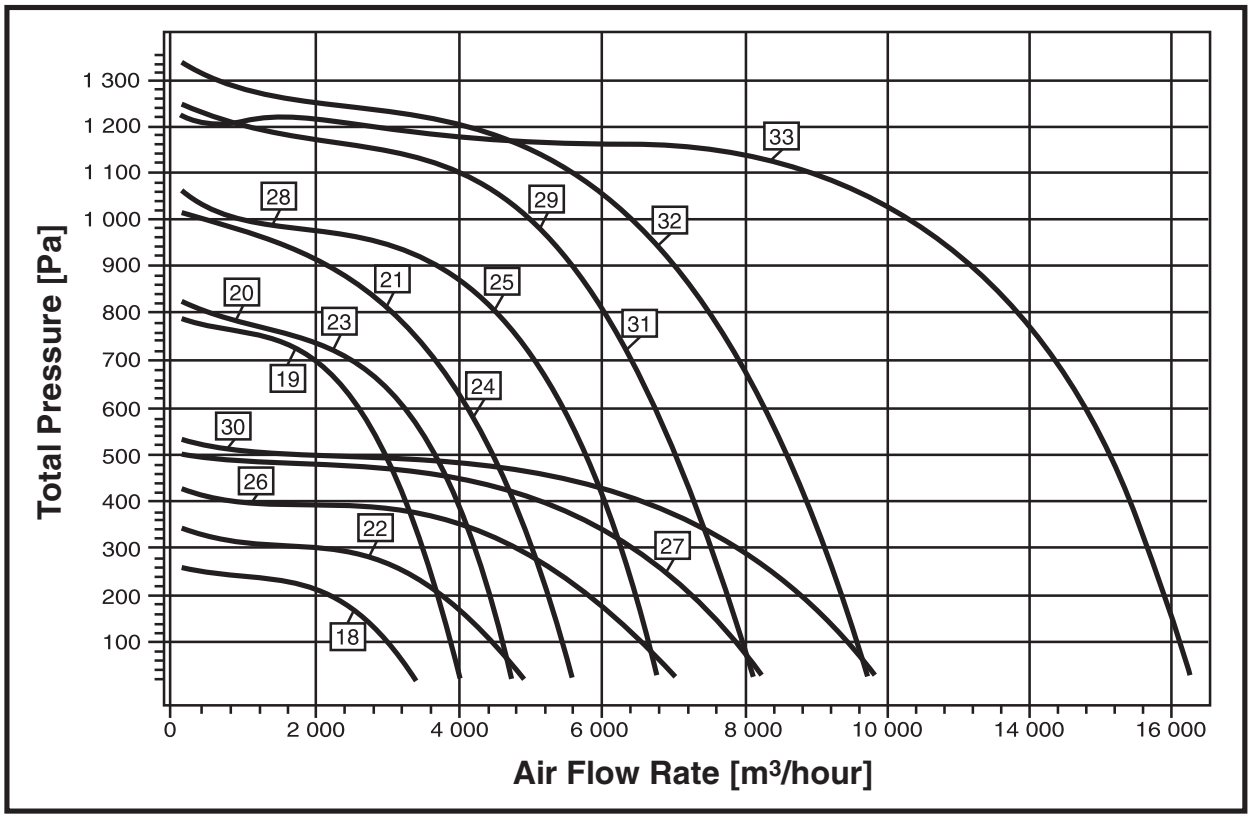

№	Fan Type	Electric Motor Type		Frequency n [min⁻¹]	Power N_y [kW]	Adjusted Sound Power Level L_{pA} [dB(A)]		
		Three-phase	Single-phase			At the Inlet	At the Outlet	Through the walls
18	ВИПм-60х35А	АИР63В4	АИРЕ71А4	1450	0,37	67	68	51
19	ВИПм-60х35Б	АИР71В2	---	2915	1,1	76	77	60
20	ВИПм-60х35В	АИР80А2	---	2880	1,5	78	79	62
21	ВИПм-60х35Г	АИР80А2	---	2890	1,5	79	80	63
22	ВИПм-70х40А	АИР71А4	АИРЕ71В4	1450	0,55	70	71	54
23	ВИПм-70х40Б	АИР80А2	---	2880	1,5	78	79	62
24	ВИПм-70х40В	АИР80А2	---	2890	1,5	79	80	63
25	ВИПм-70х40Г	АИР80В2	---	2915	2,2	82	83	66
26	ВИПм-80х50А	АИР80А4	---	1460	1,1	74	75	58
27	ВИПм-80х50Б	АИР80В4	---	1450	1,5	75	76	59
28	ВИПм-80х50В	АИР80В2	---	2915	2,2	82	83	66
29	ВИПм-80х50Г	АИР90L2	---	2900	3	83	84	67
30	ВИПм-100х50А	АИР90L4	---	1440	2,2	77	78	61
31	ВИПм-100х50Б	АИР90L2	---	2900	3	83	84	67
32	ВИПм-100х50В	АИР100S2	---	2900	4	85	86	69
33	ВИПм-100х50Г	2хАИР90L2	---	2900	2х3	86	87	70

Ducted Fans for Square Ducts

Manufactured in accordance with TU 4861-003-64600223-13

200 – 16000 m³/hour

- Impeller with backward-curved blades
- Low noise level and energy consumption
- Outflow distribution across the whole duct section
- Easy-to-clean impeller surface

Speed adjustment by switching multi-speed motor poles (optional) or using frequency converter.

Galvanized steel housing, Welded steel impeller with powder paint coating.

Impeller direct drive from the motor produced in Russia or Western Europe.

Fans may be delivered complete with flexible connectors

Built-in motor thermal protection (optional). Impeller dynamic balancing. The fan is functional in any position.

Automatic Control System see p.182.

Explosion-proof version is available.

Fans are denoted as follows:

BPKK 2,5 B - 4 - 3 - У3
- Climatic version;
- Power grid
  - 1 – single-phase
  - 3 – three-phase;
- Number of motor poles (4 or 6);
- Special enclosure version (Explosion-proof);
- Impeller diameter in decimeters (fan number);
- Fan type (Radial fan, square, ducted).

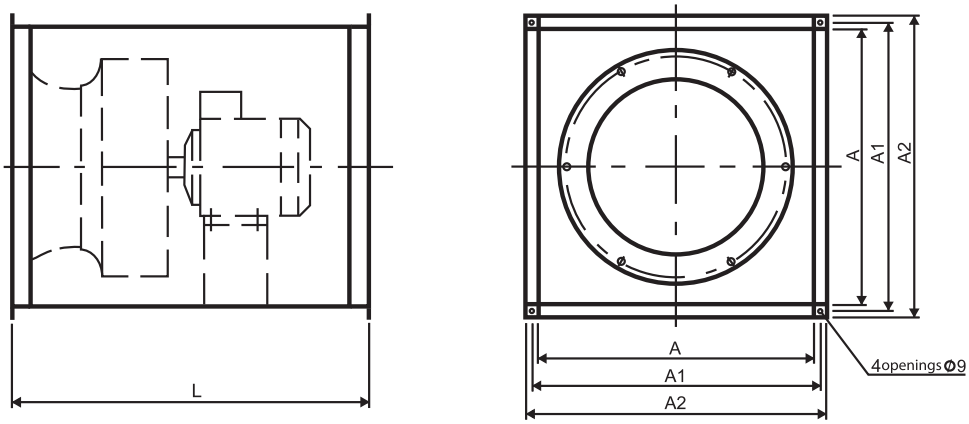

№	Fan Type	Dimensions [mm]					Weight [kg]
		A	A1	A2	L	d	
1	BPKK 2,5-4-3/1	350	370	390	430	9	17
2	BPKK 2,8-4-3/1	400	420	440	450	9	19
3	BPKK 3,15-4-3/1	450	470	490	530	9	31,2
4	BPKK 3,55-4-3	500	520	540	570	9	37
5	BPKK 3,55-6-3	500	520	540	530	9	25
6	BPKK 4-4-3	560	580	600	600	9	42
7	BPKK 4-6-3	560	580	600	530	9	28
8	BPKK 4,5-4-3	630	650	670	650	9	47
9	BPKK 4,5-6-3	630	650	670	630	9	44
10	BPKK 5-4-3	710	730	750	720	9	88
11	BPKK 5-6-3	710	730	750	670	9	51
12	BPKK 5,6-4-3	800	830	860	830	13	130
13	BPKK 5,6-6-3	800	830	860	760	13	71

CHARACTERISTICS SUMMARY DIAGRAM

200 – 16000 m³/hour

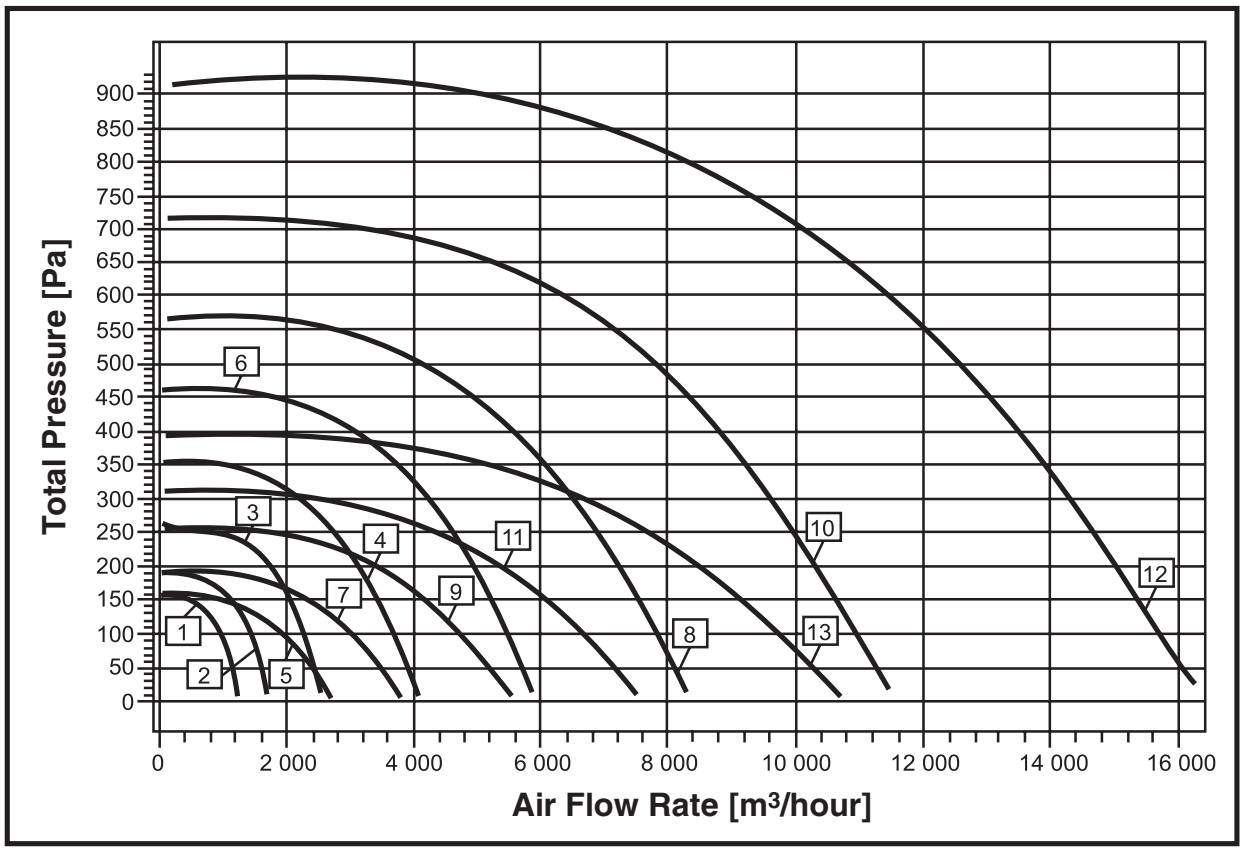

№	Fan Type	Duct Cross-Section AxA [mm]	Electric Motor Type	Frequency n [min-1]	Power N_y [kW]	Adjusted Sound Power Level L_{pA} [dB(A)]		
						At the Inlet	At the Outlet	Through the walls
1	BPKK 2,5-4-3	350x350	АИС56В4	1450	0,09	62	62	50
	BPKK 2,5-4-1	350x350	АИСЕ56В4	1450	0,09	62	62	50
2	BPKK 2,8-4-3	400x400	АИР56В4	1430	0,18	65	65	53
	BPKK 2,8-4-1	400x400	АИРЕ56В4	1430	0,18	65	65	53
3	BPKK 3,15-4-3	450x450	АИР63А4	1485	0,25	73	72	60
	BPKK 3,15-4-1	450x450	АИРЕ63А4	1485	0,25	73	72	60
4	BPKK 3,55-4-3	500x500	АИР71А4	1440	0,55	76	75	63
5	BPKK 3,55-6-3	500x500	АИР63А6	950	0,18	63	63	51
6	BPKK 4-4-3	560x560	АИР80А4	1460	1,1	80	79	67
7	BPKK 4-6-3	560x560	АИР63В6	940	0,25	67	67	55
8	BPKK 4,5-4-3	630x630	АИР80В4	1440	1,5	83	83	70
9	BPKK 4,5-6-3	630x630	АИР71В6	965	0,55	71	71	59
10	BPKK 5-4-3	710x710	АИР100S4	1455	3	86	86	74
11	BPKK 5-6-3	710x710	АИР80А6	955	0,75	74	74	62
12	BPKK 5,6-4-3	800x800	АИР112М4	1470	5,5	90	90	77
13	BPKK 5,6-6-3	800x800	АИР90L6	965	1,5	77	77	65

Manufactured in accordance with TU 4861-003-64600223-13

200 – 11500 m³/hour

- Impeller with backward-curved blades
- Low noise level and energy consumption
- Outflow distribution across the whole duct section
- Easy-to-clean impeller surface

Speed adjustment by switching multi-speed motor poles (optional) or using frequency converter.

Galvanized steel housing, Welded steel impeller with powder paint coating.

Impeller direct drive from the motor produced in Russia or Western Europe.

Built-in motor thermal protection (optional). Impeller dynamic balancing.

The fan is functional in any position.

Automatic Control System see p.182.

Explosion-proof version is available.

Fans are denoted as follows:

ВРКК 280 А В 3 - У3
- Climatic version;
- Power grid
  - 1 – single-phase
  - 3 – three-phase;
- Special enclosure version (Explosion-proof);
- Aerodynamic power index (А or Б);
- Connected air duct diameter in mm;
- Fan type (Radial fan, square, ducted, with circular adapter).

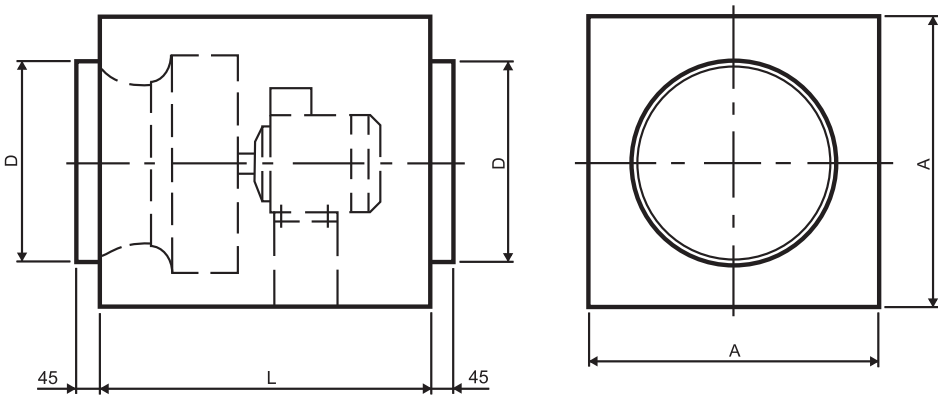

№	Fan Type	Dimensions [mm]			Weight [kg]
		A	D	L	
1	ВРКК 250Б3/1	350	250	500	19
2	ВРКК 280А3/1	350	280	500	19
3	ВРКК 280Б3/1	400	280	560	21
4	ВРКК 315А3/1	400	315	560	21
5	ВРКК 315Б3/1	450	315	630	26
6	ВРКК 355А3/1	450	355	630	26
7	ВРКК 355Б3	500	355	710	40
8	ВРКК 400А3	500	400	710	40
9	ВРКК 400Б3	560	400	800	46
10	ВРКК 450А3	560	450	800	46
11	ВРКК 450Б3	630	450	900	52
12	ВРКК 500А3	630	500	900	52
13	ВРКК 500Б3	710	500	1000	78
14	ВРКК 560А3	710	560	1000	78

CHARACTERISTICS SUMMARY DIAGRAM

200 – 16000 m³/hour

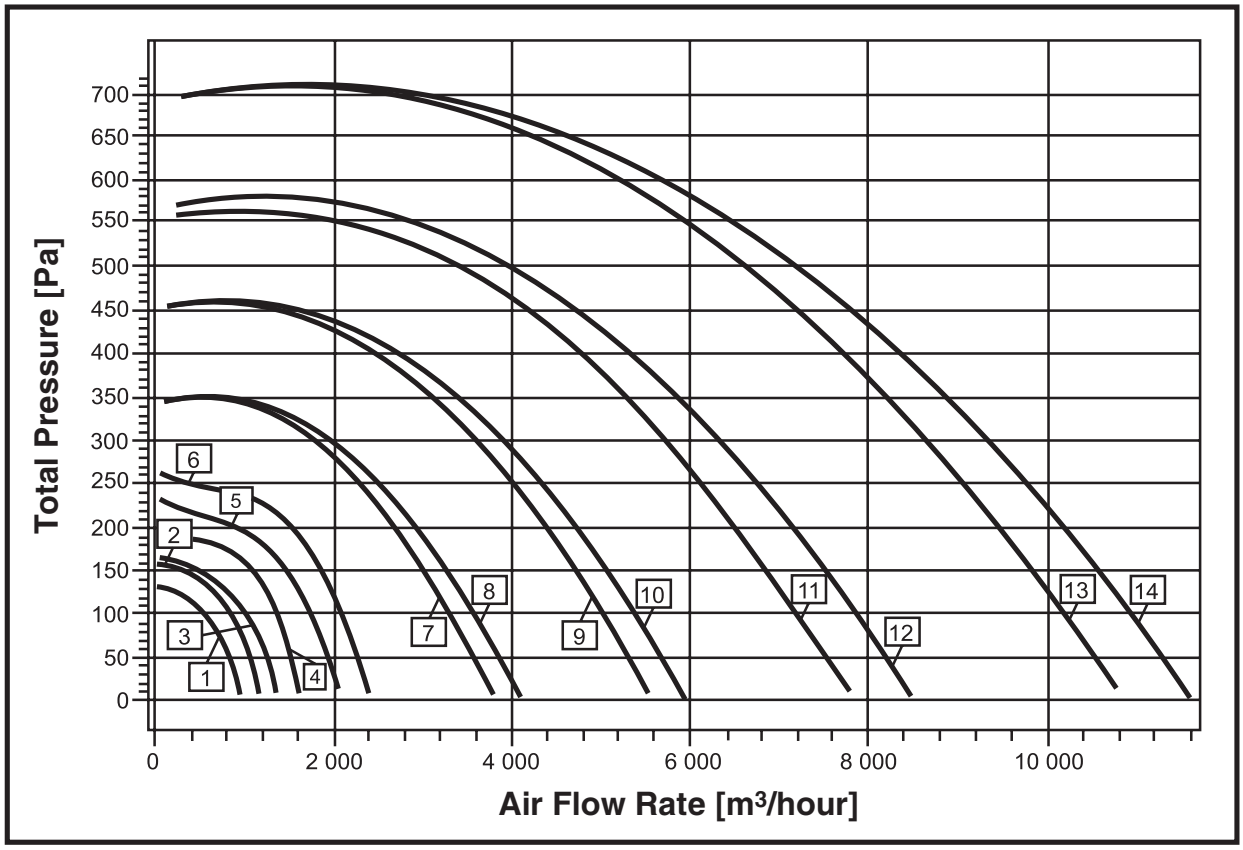

№	Fan Type	Electric Motor Type	Frequency n [min⁻¹]	Power N_y [kW]	Adjusted Sound Power Level L_{pA} [dB(A)]		
					At the Inlet	At the Outlet	Through the walls
1	BPKK 250Б3	АИС56В4	1450	0,09	62	62	50
	BPKK 250Б1	АИСЕ56А4	1450	0,09	62	62	50
2	BPKK 280А3	АИС56В4	1480	0,09	62	62	50
	BPKK 280А1	АИСЕ56А4	1480	0,09	62	62	50
3	BPKK 280Б3	АИР56В4	1430	0,18	65	65	53
	BPKK 280Б1	АИРЕ56В4	1430	0,18	65	65	53
4	BPKK 315А3	АИР56В4	1430	0,18	65	65	53
	BPKK 315А1	АИРЕ56В4	1430	0,18	65	65	53
5	BPKK 315Б3	АИР63А4	1485	0,25	69	69	57
	BPKK 315Б1	АИРЕ63А4	1485	0,25	69	69	57
6	BPKK 355А3	АИР63А4	1485	0,25	69	69	57
	BPKK 355А1	АИРЕ63А4	1485	0,25	69	69	57
7	BPKK 355Б3	АИР71А4	1440	0,55	72	72	60
8	BPKK 400А3	АИР71А4	1440	0,55	72	72	60
9	BPKK 400Б3	АИР80А4	1460	1,1	76	76	64
10	BPKK 450А3	АИР80А4	1460	1,1	76	76	64
11	BPKK 450Б3	АИР80В4	1440	1,5	80	80	68
12	BPKK 500А3	АИР80В4	1460	1,5	80	80	68
13	BPKK 500Б3	АИР100S4	1455	3	83	83	71
14	BPKK 560А3	АИР100S4	1455	3	83	83	71

Ducted fans with remote electric motor (Kitchen) and corrosion-proof fans

Manufactured in accordance with TU 4861-002-64600223-13

400 – 12000 m³/hour

◆ Impeller with forward-curved blades.

Motor position outside the air duct provides protection against effects of foreign matters from the air flow (steam, grease, etc.) and increases fan delivery.

Possibility of revolution frequency control by switching poles of the multispeed motor (optional, have to be ordered) or by a frequency converter.

Galvanized steel housing, welded steel impeller with powder paint coating.

Fans may be optionally supplied completed with flexible ducts.

Impeller dynamic balancing.

The fan is functional in any position.

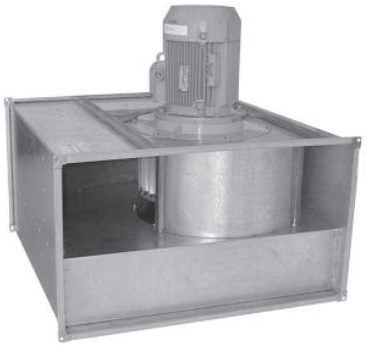

ВРПВ-Н КХ (VRPV-N KH) fans are designed for operation in the kitchen exhaust systems and local exhausts of other manufactures for the purpose of handling air at the temperature of up to +200 °C and increased humidity.

ВРПВ-Н КР (VRPV-N KR) fans are equipped with stainless steel case and designed for moving of slightly aggressive gas-air-steam mixtures.

Fans are allowed to be applied in areas of the 2nd category of location providing electric motor protection against weather and direct sunlight.

Automatic Control System see p.182.

Explosion-proof version is available.

Fans are denoted as follows:

ВРПВ - Н - 3,15 ВКХ- 2 - 3 - У3

- Climatic version;
- Power grid: 1 – single-phase, 3 – three-phase;
- Number of motor poles (2, 4, 6, or 8);
- Special version: КХ – kitchen, or КР – corrosion-proof;
- Special version: В – explosion-proof;
- Impeller diameter in decimeters (fan number);
- Electric motor is located outside the duct;
- Impeller blades type: В – forward-curved blades;
- Fan type (Radial fan, rectangular, ducted).

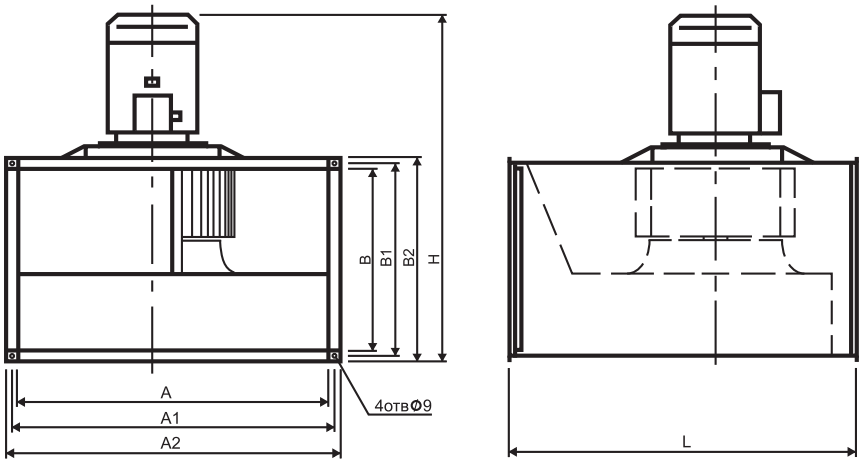

No.	Fan Type	Dimensions [mm]								Weight [kg]
		A	B	A1	B1	A2	B2	H	L	
1	ВРПВ-Н-2-4-3/1	500	250	520	270	540	290	495	550	18.4
2	ВРПВ-Н-2,25-4-3/1	500	300	520	320	540	340	570	600	20.7
3	ВРПВ-Н-2,5-4-3/1	600	300	620	320	640	340	590	680	37
4	ВРПВ-Н-2,8-4-3	600	350	620	370	640	390	650	720	56.8
5	ВРПВ-Н-3,15-4-3	700	400	720	420	740	440	780	780	64
6	ВРПВ-Н-3,55-4-3	800	500	830	530	860	560	900	900	72
7	ВРПВ-Н-3,55-6-3	800	500	830	530	860	560	900	900	90.5
8	ВРПВ-Н-4-4-3	900	500	930	530	960	560	980	1035	131
9	ВРПВ-Н-4-6-3	900	500	930	530	960	560	920	1035	102

CHARACTERISTICS SUMMARY DIAGRAM

400 – 12000 m³/hour

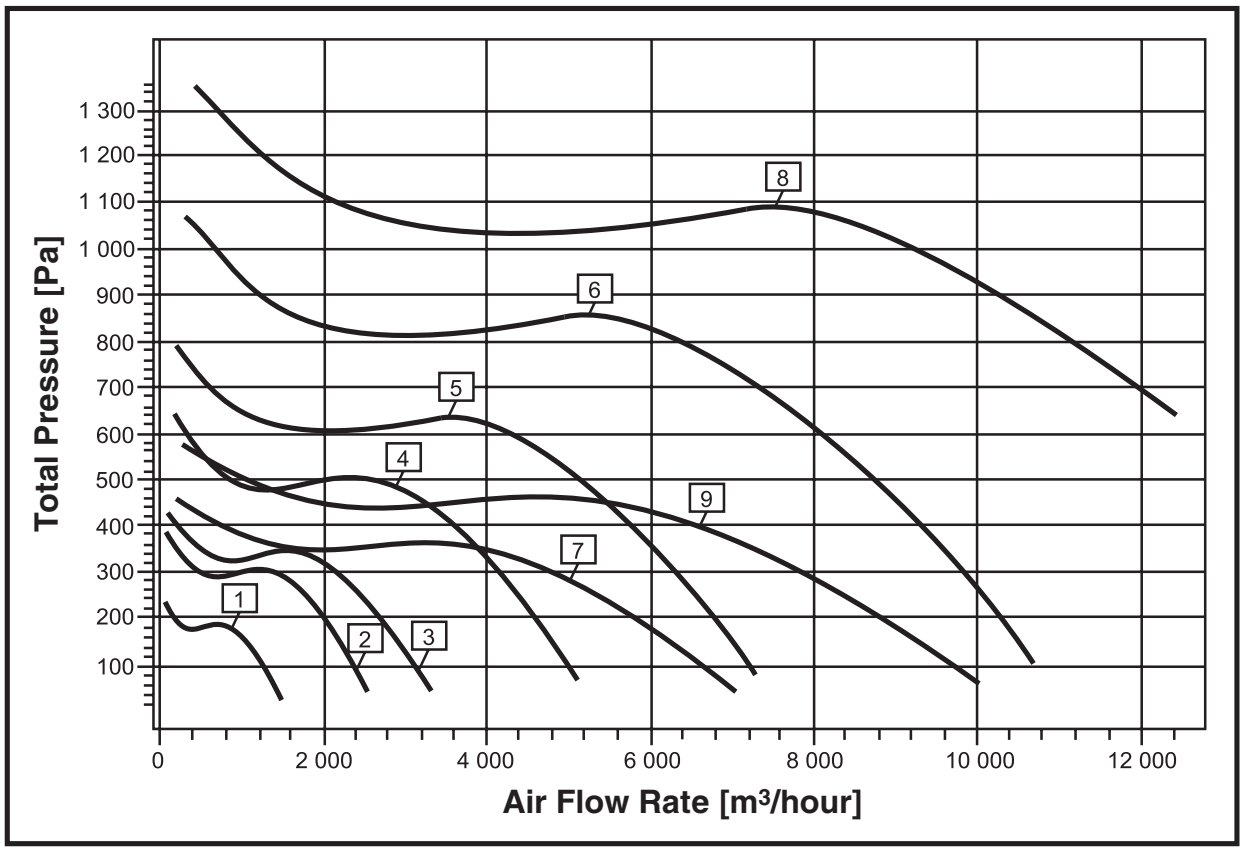

№	Fan Type	Duct Cross-Section AxB [mm]	Electric Motor Type	Frequency n [min⁻¹]	Power N_y [kW]	Adjusted Sound Power Level L_{pA} [dB(A)]	
						At the Inlet	At the Outlet
1	ВРПВ-Н-2-4-3	500x250	АИР63В4	1420	0,37	71	74
	ВРПВ-Н-2-4-1	500x250	АИРЕ71А4	1420	0,37	71	74
2	ВРПВ-Н-2,25-4-3	500x300	АИР71А4	1450	0,55	74	77
	ВРПВ-Н-2,25-4-1	500x300	АИРЕ71В4	1450	0,55	74	77
3	ВРПВ-Н-2,5-4-3	600x300	АИР80А4	1350	1,1	77	80
4	ВРПВ-Н-2,8-4-3	600x350	АИР80В4	1450	1,5	80	83
5	ВРПВ-Н-3,15-4-3	700x400	АИР100L4	1410	4	83	86
6	ВРПВ-Н-3,55-4-3	800x500	АИР112М4	1450	5,5	87	89
7	ВРПВ-Н-3,55-6-3	800x500	АИР100L6	950	2,2	67	71
8	ВРПВ-Н-4-4-3	900x500	АИР132М4	1450	11	89	91
9	ВРПВ-Н-4-6-3	900x500	АИР112МВ6	950	4	82	84

Ducted fans with remote electric motor (Kitchen) and corrosion-proof fans

Manufactured in accordance with TU 4861-002-64600223-13

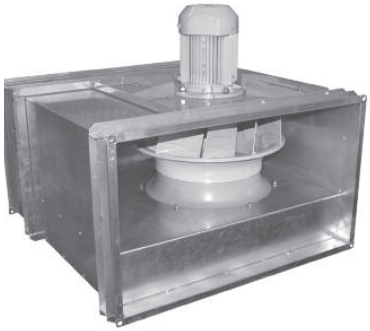

500 – 14000 m³/hour

- Impeller with backward-curved blades;
- Low energy consumption.

Motor position outside the air duct provides protection against effects of foreign matters from the air flow (steam, grease, etc.).

Possibility of revolution frequency control by switching poles of the multispeed motor (optional, have to be ordered) or by a frequency converter.

Galvanized steel housing, welded steel impeller with powder paint coating. ВРПН-Н КХ (VRPN-N KH) stainless steel impeller does not have a coating, which allows, when necessary, do the cleaning according to the method specified in the service list and on page 176.
ВРПН-Н КХ (VRPN-N KH) fans are designed for operation in the kitchen exhaust systems and local exhausts of other manufactures for the purpose of handling air at the temperature of up to +200 °C and increased humidity.

VRPN-N KR fans are made from stainless steel and designed for moving of slightly aggressive gas-air-steam mixtures.

Fans are allowed to be applied in areas of the 2nd category of location providing electric motor protection against weather and direct sunlight.
For the purpose of normal fan operation it is recommended to install oil and grease entrainment filter, which shall be cleaned or replaced on a regular basis.
Impeller dynamic balancing. The fan is functional in any position.

Explosion-proof version is available.

Automatic Control System see p.182.

Fans are denoted as follows:

ВРПН – Н – 3,15 ВКХ – 2 – 3 – У3

- Climatic version;
- Power grid: 1 – single-phase, 3 – three-phase;
- Number of motor poles (2, 4, 6, or 8);
- Special version: КХ – kitchen, or КР – corrosion-proof;
- Special version: В – explosion-proof;
- Impeller diameter in decimeters (fan number);
- Electric motor is located outside the duct;
- Impeller blades type: Н – Backward-curved blades;
- Fan type (Radial fan, rectangular, ducted).

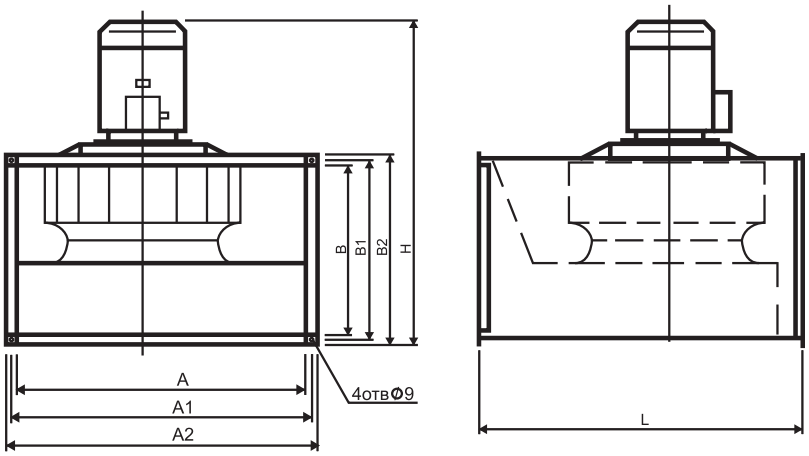

No.	Fan Type	Dimensions [mm]								Weight [kg]
			B	A1	B1	A2	B2	H	L	
1	ВРПН-Н-1,6-2-3/1	300	150	320	170	340	190	340	340	10.8 (10.9)
2	ВРПН-Н-1,8-2-3/1	400	200	420	220	440	240	420	365	15.3 (15.4)
3	ВРПН-Н-2-2-3/1	400	200	420	220	440	240	420	365	16.0 (16.1)
4	ВРПН-Н-2,25-2-3/1	500	250	520	270	540	290	475	455	23.8 (23.9)
5	ВРПН-Н-2,5-2-3/1	500	250	520	270	540	290	475	455	25.5 (25.6)
6	ВРПН-Н-2,5-4-3/1	500	250	520	270	540	290	440	455	23.0 (23.1)
7	ВРПН-Н-2,8-2-3	500	300	520	320	540	340	560	475	32.4 (32.5)
8	ВРПН-Н-2,8-4-3/1	500	300	520	320	540	340	520	475	26.4 (26.5)
9	ВРПН-Н-3,15-2-3	500	300	520	320	540	340	585	530	39.7 (39.8)
10	ВРПН-Н-3,15-4-3/1	500	300	520	320	540	340	520	530	30.8 (30.9)
11	ВРПН-Н-3,55-2-3	600	350	620	370	640	390	665	585	52.8 (52.9)
12	ВРПН-Н-3,55-4-3/1	600	350	620	370	640	390	575	585	39.9 (40)
13	ВРПН-Н-4-4-3	700	400	720	420	740	440	660	665	53.7 (53.8)
14	ВРПН-Н-4,5-4-3	800	500	830	530	860	560	790	835	79.4 (79.5)
15	ВРПН-Н-5-4-3	800	500	830	530	860	560	820	835	88.8 (88.9)
16	ВРПН-Н-5,6-4-3	1000	500	1030	530	1060	560	975	950	110.6 (110.7)

CHARACTERISTICS SUMMARY DIAGRAM

500 – 14000 m³/hour

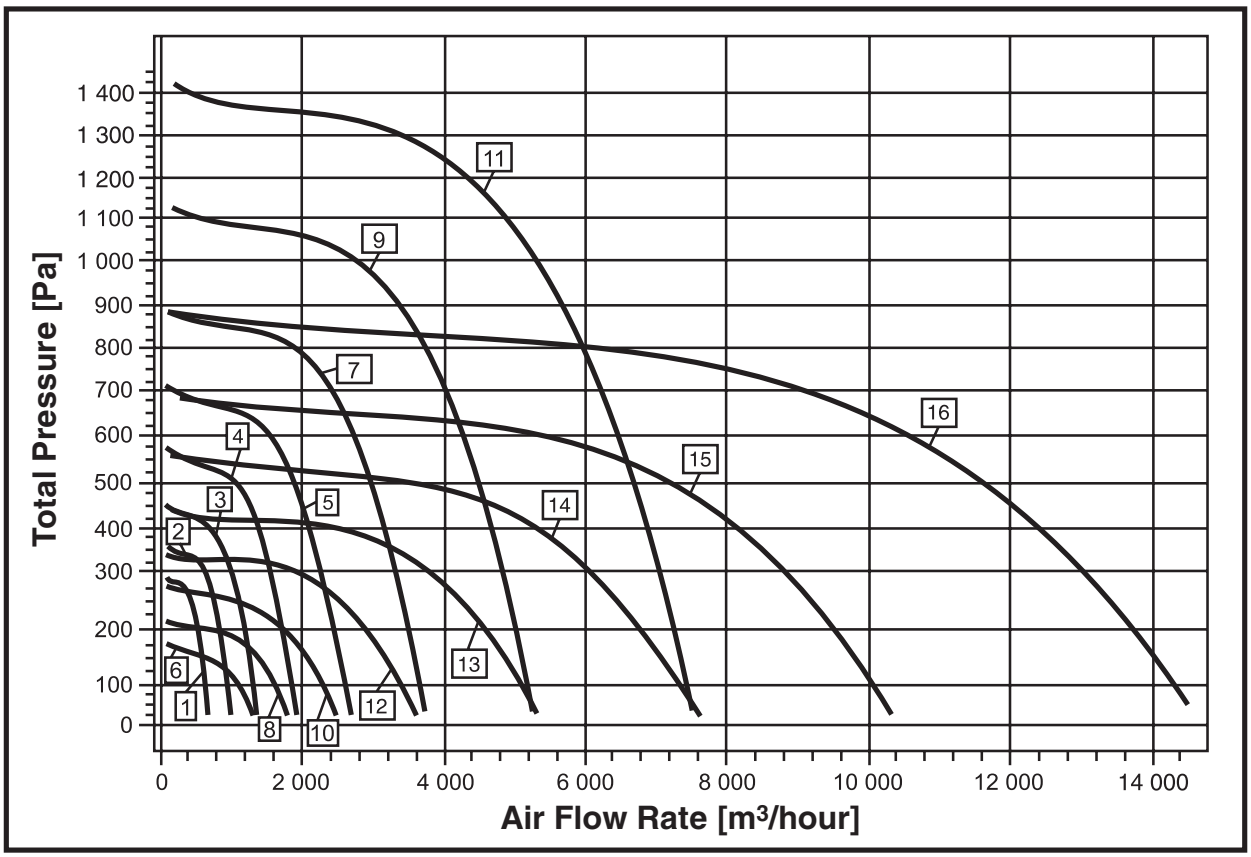

№	Fan Type	Duct Cross-Section AxB [mm]	Electric Motor Type	Frequency n [min-1]	Power N_y [kW]	Adjusted Sound Power Level L_{pA} [dB(A)]	
						At the Inlet	At the Outlet
1	ВРПН-Н(К)-1,6-2-3	300x150	АИС56А2	2900	0,09	62	66
	ВРПН-Н(К)-1,6-2-1	300x150	АИСЕ56А2	2900	0,09	62	66
2	ВРПН-Н(К)-1,8-2-3	400x200	АИС56В2	2900	0,12	67	74
	ВРПН-Н(К)-1,8-2-1	400x200	АИСЕ56В2	2900	0,12	67	74
3	ВРПН-Н(К)-2-2-3	400x200	АИР56А2	2900	0,18	69	73
	ВРПН-Н(К)-2-2-1	400x200	АИРЕ56А2	2900	0,18	69	73
4	ВРПН-Н(К)-2,25-2-3	500x250	АИР63А2	2900	0,37	72	79
	ВРПН-Н(К)-2,25-2-1	500x250	АИРЕ63А2	2900	0,37	72	79
5	ВРПН-Н(К)-2,5-2-3	500x250	АИР63В2	2900	0,55	76	80
	ВРПН-Н(К)-2,5-2-1	500x250	АИРЕ63В2	2900	0,55	76	80
6	ВРПН-Н(К)-2,5-4-3	500x250	АИС56В4	1450	0,09	57	61
	ВРПН-Н(К)-2,5-4-1	500x250	АИСЕ56В4	1450	0,09	57	61
7	ВРПН-Н(К)-2,8-2-3	500x300	АИР71В2	2900	1,1	62	69
8	ВРПН-Н(К)-2,8-4-3	500x300	АИР56А4	1450	0,12	60	64
	ВРПН-Н(К)-2,8-4-1	500x300	АИРЕ56А4	1450	0,12	60	64
9	ВРПН-Н(К)-3,15-2-3	500x300	АИР80В2	2900	2,2	66	73
10	ВРПН-Н(К)-3,15-4-3	500x300	АИР63А4	1450	0,25	65	69
	ВРПН-Н(К)-3,15-4-1	500x300	АИРЕ63А4	1450	0,25	65	69
11	ВРПН-Н(К)-3,55-2-3	600x350	АИР90L2	2900	3	81	88
12	ВРПН-Н(К)-3,55-4-3	600x350	АИР63В4	1450	0,37	67	71
	ВРПН-Н(К)-3,55-4-1	600x350	АИРЕ63В4	1450	0,37	67	71
13	ВРПН-Н(К)-4-4-3	700x400	АИР71В4	1450	0,75	72	76
14	ВРПН-Н(К)-4,5-4-3	800x500	АИР80В4	1450	1,5	75	79
15	ВРПН-Н(К)-5-4-3	800x500	АИР90L4	1450	2,2	79	83
16	ВРПН-Н(К)-5,6-4-3	1000x500	АИР100L4	1450	4	80	84

Explosion-Proof and Acid-Resistant Ducted Fans

Manufactured in accordance with TU 4861-002-64600223-13

500 – 14000 m³/hour

- ◆ Impeller with backward-curved blades
- ◆ Low energy consumption
- ◆ Impeller dynamic balancing
- ◆ The fan is functional in any position

Motor position outside the air duct provides protection against effects of foreign matters from the air flow (steam, grease, etc.).

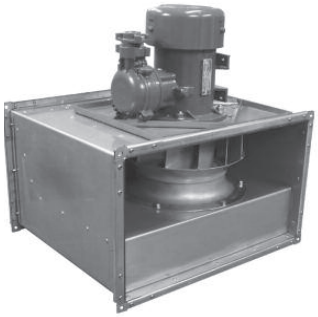

Fans are denoted as follows:

ВРПН – Н – 3,15 ВК – 2 – 3 – У3

- Climatic version;
- Power grid: 3 – three-phase;
- Number of motor poles (2, 4, 6, or 8);
- Special version: K – acid-proof
- Special version: B – explosion-proof;
- Impeller diameter in decimeters (fan number);
- Electric motor is located outside the duct;
- Impeller blades type:
  H – backward-curved blades, B – forward-curved blades;
- Fan type (Radial fan, rectangular, ducted).

Possibility of rotation frequency control by switching poles of the multi-speed motor (optional, have to be ordered) or by a frequency converter.

Casing and impeller are made of stainless acid-resistant steel 10X17H13M3T or similar in characteristics, and do not have a coating.

EX-rating of motors is no lower than 2ExdIICT4 (explosion-proof in hydrogen, acetylene, or bi-sulfide carbon gaseous environment). Resistibility to sulfuric acid, hydrochloric acid, nitric acid, and phosphoric acid fumes is provided.

Fans are designed for handling aggressive (acidic) steam-gas and air explosive mixtures of IIC category, groups T1-T4 according to GOST R 51330.11 classification, which are not containing explosive dusts, explosive agents, adhesive agents, fibrous materials, and abrasive materials, with dust and other solid impurities content of 100 mg/m³ max at the temperature ranging from -40 to +80 °C.

Aggressiveness of handled gas-air mixtures in relation to 10X17H13M3T steel or identical shall not cause corrosion at the rate exceeding 0.1 mm per year.

Fans shall not be used for handling of steam-gas and air mixtures from manufacturing plants, where explosive materials may be heated above self-ignition temperature or placed under excess pressure.

Functional area: explosion hazard zones inside facilities or external installations in accordance with explosion protection grading of installed explosion-proof electrical equipment pursuant to GOST R 51330.13-99 (IEC 60079-1496), ch.7.3 of Electric Installation Code and other regulatory documents, governing application of electric installations in explosion hazard zones. In case of outdoor installation, all-weather shelter shall be considered. Fans are used for direct mounting into exhaust system rectangular duct in accumulator station facilities. Fans are used for operation in temperate (У) climate conditions of 3rd category of location according to GOST 15150 at the environment temperature ranging from -40 to +40 °C. Fans are allowed to be applied in areas of the 2nd category of location providing electric motor protection against weather and direct sunlight.

Automatic Control System see p.182.

ВРПН-НВК (VRPN-NVK) fans overall and connection dimensions [mm]:

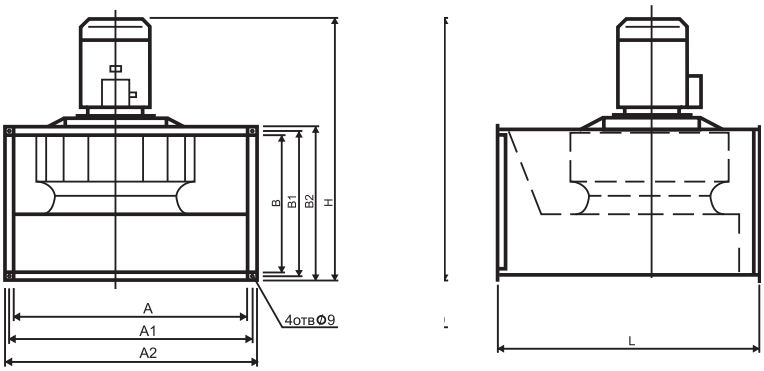

No.	Fan Model	Dimensions [mm]								Weight [kg]
		A	A1	A2	B	B1	B2	L	H	
1	ВРПН-Н-1,6ВК-2-3	300	320	340	150	170	190	340	340	13.8
2	ВРПН-Н-1,8ВК-2-3	400	420	440	200	220	240	420	365	18.3
3	ВРПН-Н-2ВК-2-3	400	420	440	200	220	240	420	365	19.0
4	ВРПН-Н-2,25ВК-2-3	500	520	540	250	270	290	475	455	26.8
5	ВРПН-Н-2,5ВК-2-3	500	520	540	250	270	290	475	455	30.5
6	ВРПН-Н-2,5ВК-4-3	500	520	540	250	270	290	440	455	29.0
7	ВРПН-Н-2,8ВК-2-3	500	520	540	300	320	340	560	475	40.4
8	ВРПН-Н-2,8ВК-4-3	500	520	540	300	320	340	520	475	32.4
9	ВРПН-Н-3,15ВК-2-3	500	520	540	300	320	340	585	530	49.7
10	ВРПН-Н-3,15ВК-4-3	500	520	540	300	320	340	520	530	36.8
11	ВРПН-Н-3,55ВК-2-3	600	620	640	350	370	390	665	585	64.8
12	ВРПН-Н-3,55ВК-4-3	600	620	640	350	370	390	575	585	45.9
13	ВРПН-Н-4ВК-4-3	700	720	740	400	420	440	660	665	61.7
14	ВРПН-Н-4,5ВК-4-3	800	830	740	500	530	560	790	835	89.4
15	ВРПН-Н-5ВК-4-3	800	830	860	500	530	560	820	835	100.8
16	ВРПН-Н-5,6ВК-4-3	1,000	1,030	1,060	500	530	560	975	950	125.6

ВРПВ-НВК (VRPV-NVK) fans overall and connection dimensions

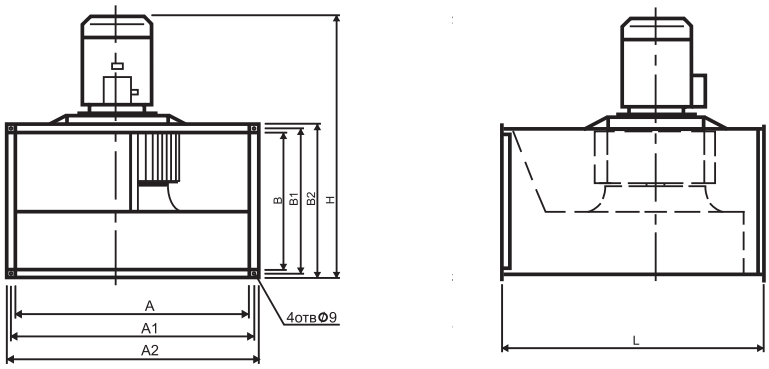

No.	Fan Type	Dimensions [mm]								Weight [kg]
		A	B	A1	B1	A2	B2	H	L	
1	ВРПВ-Н-2ВК-4-3	500	250	520	270	540	290	495	550	18.4
2	ВРПВ-Н-2,25ВК-4-3	500	300	520	320	540	340	570	600	20.7
3	ВРПВ-Н-2,5ВК-4-3	600	300	620	320	640	340	590	680	37
4	ВРПВ-Н-2,8ВК-4-3	600	350	620	370	640	390	650	720	56.8
5	ВРПВ-Н-3,15ВК-4-3	700	400	720	420	740	440	780	780	64
6	ВРПВ-Н-3,55ВК-4-3	800	500	830	530	860	560	900	900	72
7	ВРПВ-Н-3,55ВК-6-3	800	500	830	530	860	560	900	900	90.5
8	ВРПВ-Н-4ВК-4-3	900	500	930	530	960	560	980	1,035	131
9	ВРПВ-Н-4ВК-6-3	900	500	930	530	960	560	920	1,035	102

CHARACTERISTICS SUMMARY DIAGRAM

500 – 14000 m³/hour

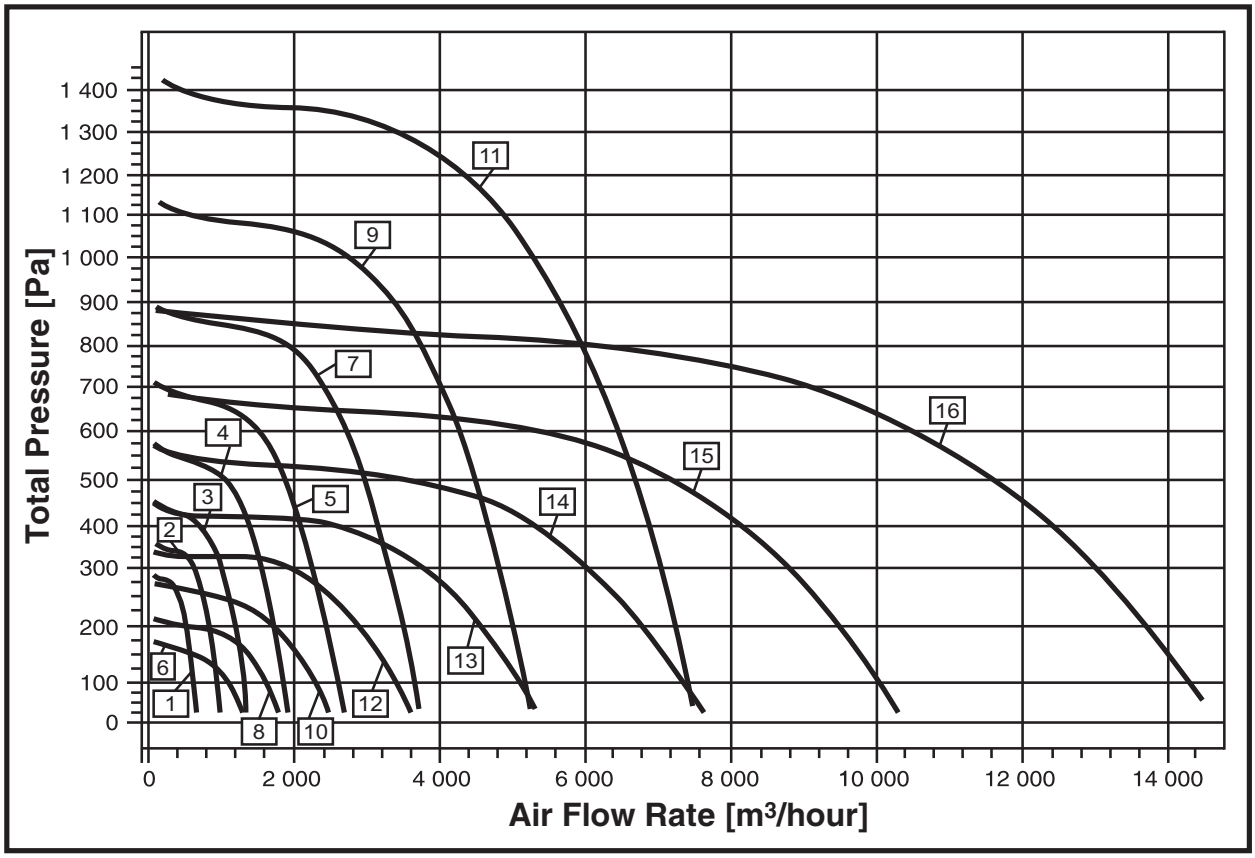

No.	Fan Model	Electric Motor			Fan Weight [kg]
		Type	Rotation Speed [rpm]	Power [kW]	
1	ВРПН-Н-1,6ВК-2-3	АИМ63А2	2900	0,37	13,8
2	ВРПН-Н-1,8ВК-2-3	АИМ63А2	2900	0,37	18,3
3	ВРПН-Н-2ВК-2-3	АИМ63А2	2900	0,37	19.0
4	ВРПН-Н-2,25ВК-2-3	АИМ63А2	2900	0,37	26,8
5	ВРПН-Н-2,5ВК-2-3	АИР63В2	2900	0,55	30,5
6	ВРПН-Н-2,5ВК-4-3	АИМ63А4	1450	0,25	29,0
7	ВРПН-Н-2,8ВК-2-3	АИМ71В2	2900	1,1	40,4
8	ВРПН-Н-2,8ВК-4-3	АИМ63А4	1450	0,25	32,4
9	ВРПН-Н-3,15ВК-2-3	АИМ80В2	2900	2,2	49,7
10	ВРПН-Н-3,15ВК-4-3	АИМ63А4	1450	0,25	36,8
11	ВРПН-Н-3,55ВК-2-3	АИМ90L2	2900	3	64,8
12	ВРПН-Н-3,55ВК-4-3	АИМ63В4	1450	0,37	45,9
13	ВРПН-Н-4ВК-4-3	АИМ71В4	1450	0,75	61,7
14	ВРПН-Н-4,5ВК-4-3	АИМ80В4	1450	1,5	89,4
15	ВРПН-Н-5ВК-4-3	АИМ90L4	1450	2,2	100,8
16	ВРПН-Н-5,6ВК-4-3	АИМ100L4	1450	4	125,6

Note:
1) Explosion protection degree for the type «ВК» fan motors is no lower than 2ExdIICT4.

CHARACTERISTICS SUMMARY DIAGRAM

400 – 12000 m³/hour

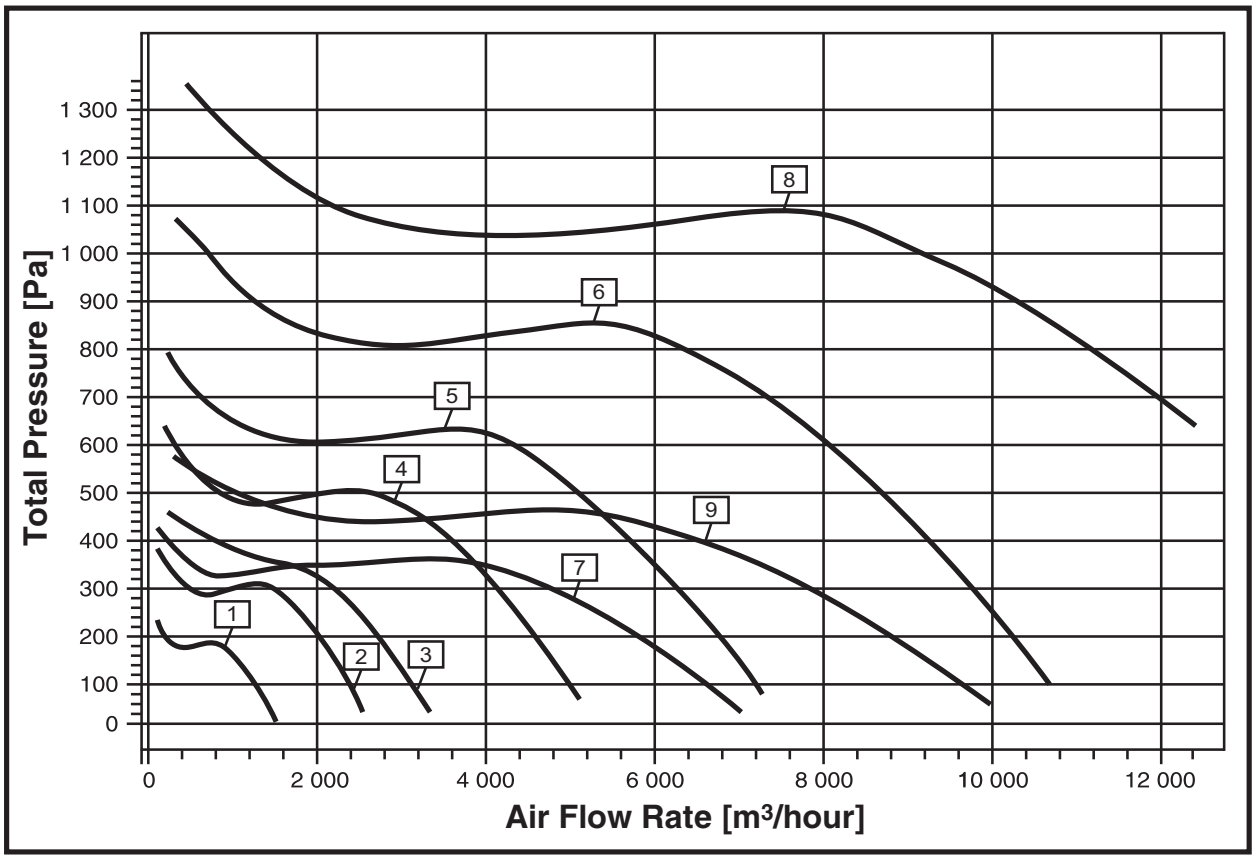

No.	Fan Model	Duct Cross-Section AxB [mm]	Electric Motor Type	Frequency n [min⁻¹]	Power Ny [kW]	Adjusted Sound Power Level L_{pA} [dB(A)]	
						At the Inlet	At the Outlet
1	ВРПВ-Н-2ВК-4-3	500x250	АИМ63В4	1420	0,37	71	74
2	ВРПВ-Н-2,25ВК-4-3	500x300	АИМ71А4	1450	0,55	74	77
3	ВРПВ-Н-2,5ВК-4-3	600x300	АИМ80А4	1350	1,1	77	80
4	ВРПВ-Н-2,8ВК-4-3	600x350	АИМ80В4	1450	1,5	80	83
5	ВРПВ-Н-3,15ВК-4-3	700x400	АИМ100L4	1410	4	83	86
6	ВРПВ-Н-3,55ВК-4-3	800x500	АИМ112М4	1450	5,5	87	89
7	ВРПВ-Н-3,55ВК-6-3	800x500	АИМ100L6	950	2,2	67	71
8	ВРПВ-Н-4ВК-4-3	900x500	АИМ132М4	1450	11	89	91
9	ВРПВ-Н-4ВК-6-3	900x500	АИМ112МВ6	950	4	82	84

Note:
1) Explosion protection degree for the type «ВК» fan motors is no lower than 2ExdIICT4

Manufactured in accordance with TU 4861-009-64600223-12

300 – 85000 m³/hour

Radial fans ВР-80-75 (VR-80-75) are used in HVAC applications of industrial, public, and residential buildings with ductwork.

VR-80-75 fans are equipped with radial impellers with backward-curved blades directly actuated by general purpose industrial three-phase induction motors.

Fans VR-80-75:
available in right-handed and left-handed versions.

Automatic Control System see p.182.

Explosion-proof version is available.

Fans are denoted as follows:

ВР – 80-75 – 6,3 Н – 00 – ПР90° – У2

- У2 – Climatic version;
- ПР90° – Rotating direction and housing positioning;
- 00 – Modification index number;
- Н – Design variant;
- 6,3 – Impeller diameter in decimeters;
- 80-75 – Aerodynamic configuration index;
- ВР – Fan type (Radial fan).

Fan cases may be mounted in any position shown on Figure 1.

Suction side view

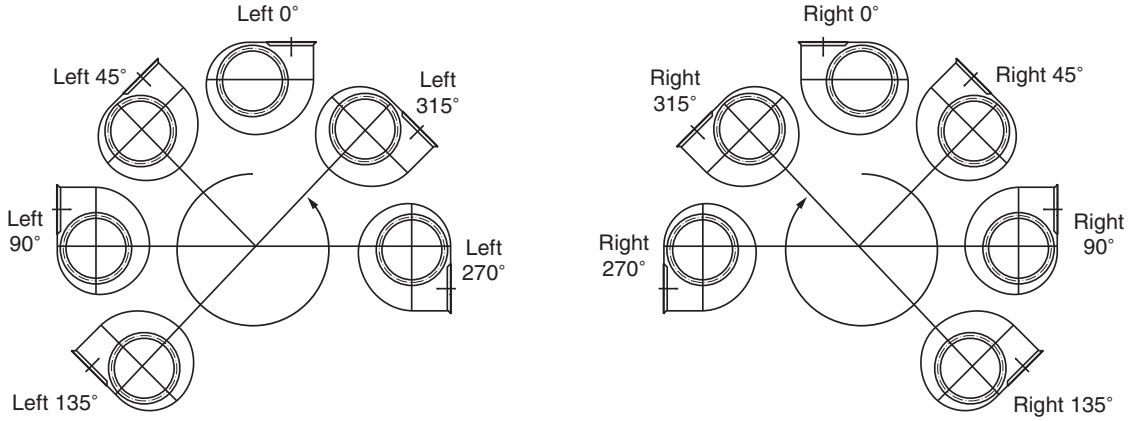

Left-handed rotation

Right-handed rotation

Fig. 1 Fan case position

Fans are used in conditions of moderate climate (У, УХЛ), cold climate (ХЛ) and tropical climate (ТС, ТВ, ТМ) of the second category of location according to GOST 15150.

It is allowed operating fans according to the first category of location provided special appliances and motor weather protection (see pp.169-170).

ВР-80-75-2,5Н... – general purpose;
ВР-80-75-2,5Ж... – general purpose, heat-resistant;
ВР-80-75-2,5К1... – corrosion-proof;
ВР-80-75-2,5К1Ж... – corrosion-proof, heat-resistant;
ВР-80-75-2,5В... – explosion-proof, made of dissimilar metals;
ВР-80-75-2,5ВЖ... – explosion-proof, heat-resistant, made of dissimilar metals;
ВР-80-75-2,5В2... – explosion-proof;
ВР-80-75-2,5ВК1... – explosion-proof, corrosion-proof;
ВР-80-75-2,5ВК1Ж... – explosion-proof, corrosion-proof, heat-resistant.

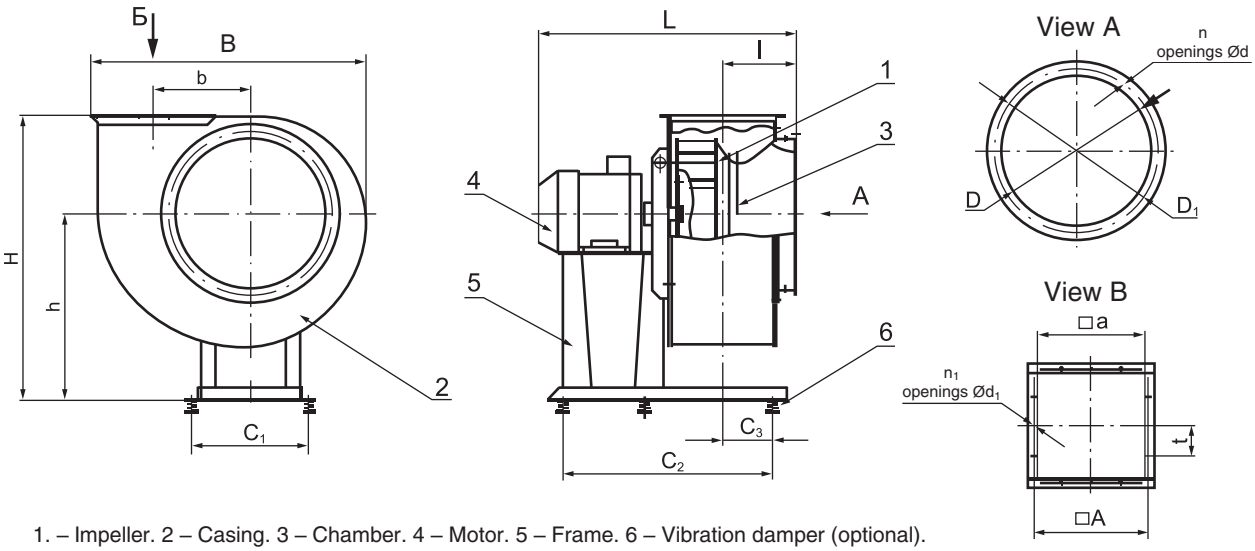

1. – Impeller. 2 – Casing. 3 – Chamber. 4 – Motor. 5 – Frame. 6 – Vibration damper (optional).

Fig. 1 Installation, connection, and overall dimensions of fans BP-80-75-2,5 ...12,5

Designation	BP-80-75 (VR-80-75) No. 2,5	BP-80-75 (VR-80-75) No. 3,15	BP-80-75 (VR-80-75) No. 4	BP-80-75 (VR-80-75) No. 5	BP-80-75 (VR-80-75) No. 6,3	BP-80-75 (VR-80-75) No. 8	BP-80-75 (VR-80-75) No. 10	BP-80-75 (VR-80-75) No. 12,5
B	470	584	733	908	1140	1450	1815	2244
L_{max}	480	513	723	685	1030	1160	1440	1800
H	503	634	744	990	1120	1415	1650	2180
b	160	201	260	324	400	520	650	813
l	125	145	174	225	310	385	455	540
h	320	410	470	650	720	905	1130	1370
D	250	315	400	500	630	800	1020	1270
D_1	274	340	430	530	660	840	1060	1310
d	8	8	8	7x14	7x14	11	12	12
n	4	4	4	16	20	16	24	24
A	205	255	310	380	470	600	750	930
a	180	220	280	350	440	560	700	875
t	100	100	100	100	100	150	150	150
d_1	7	7	7	7	7	11	12	12
n_1	12	12	12	16	20	16	20	24
C_1	260	340	410	410	480	610	840	1260
C_2	350	430	630	535	700	410+410	1260	1220
C_3	70	122	240	74	116	165	247	280

BP-80-75 (VR-80-75) Fans Noise Performance

Fan Designation	RPM	Octave sound-power levels [dB] in center frequency bands [Hz]						
		125	250	500	1000	2000	4000	8000
BP-80-75-2,5	1450	64	65	67	72	61	54	44
	2950	80	81	88	79	77	69	59
BP-80-75-3,15	1450	71	79	72	70	68	60	51
	2950	85	88	94	85	84	76	65
BP-80-75-4	1450	79	81	72	70	68	64	51
	2950	77	88	90	81	79	75	65
BP-80-75-5	950	77	85	78	76	74	66	57
	1450	86	94	87	85	83	75	66
BP-80-75-6,3	950	93	86	84	82	80	77	68
	1450	94	102	95	93	91	83	74
BP-80-75-8	950	98	94	92	90	88	82	73
BP-80-75-10	950	106	101	100	98	95	89	83
BP-80-75-12,5	740	107	102	99	97	94	91	82

CHARACTERISTICS SUMMARY DIAGRAM

650 – 85500 m³/hour

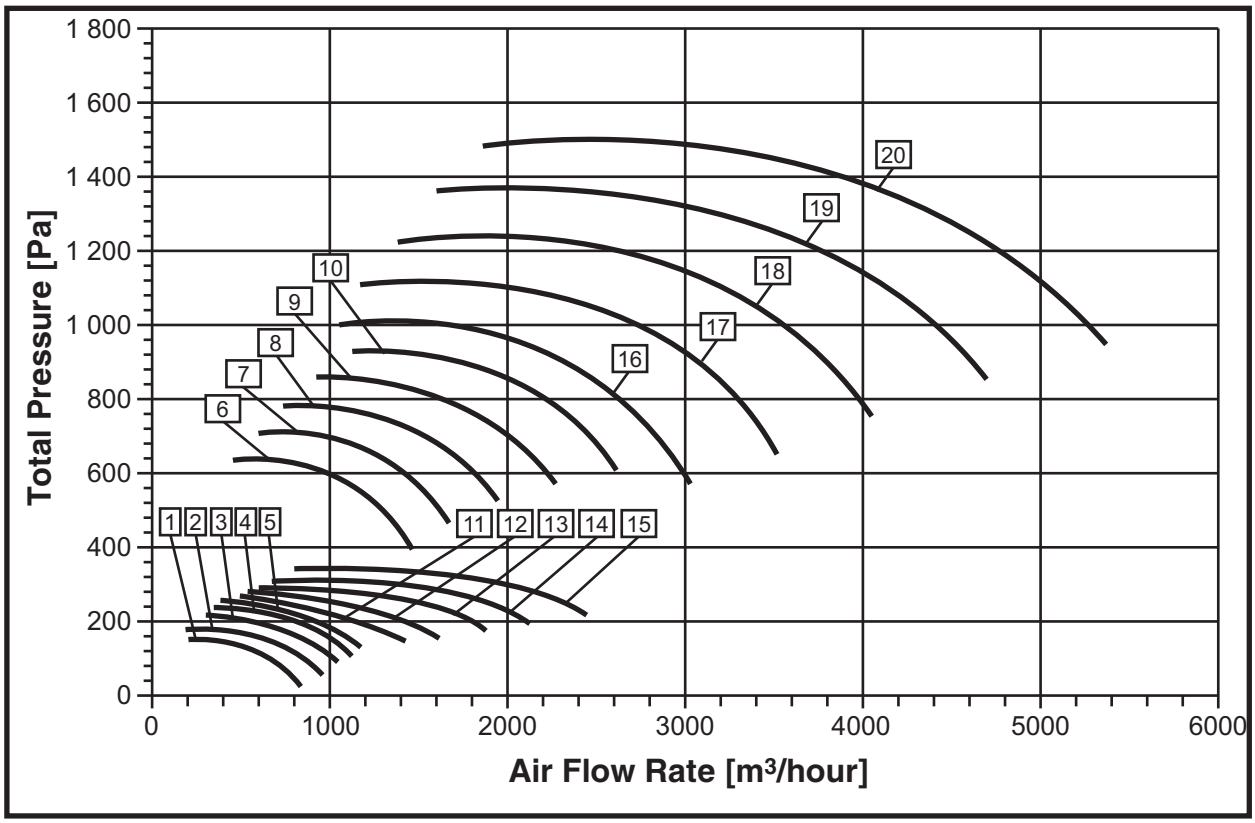

No.	Fan Designation	Modification Number	Motor			Nominal capacity [m³/hour]	Weight (max) [kg]
			Type	Rotation speed [rpm]	Power [kW]		
1	BP-80-75-2,5	00 05 10	АИР 56 А4 АИР 56 В4 АИР 63А4	1450	0,12 0,18 0,25	650 780 700	25
2		01 06 11	АИР 56 А4 АИР 56 В4 АИР 63А4		0,12 0,18 0,25	750 800 900	25
3		02 07 12	АИР 56 А4 АИР 56 В4 АИР 63А4		0,12 0,18 0,25	920 940 990	25
4		03 08 13	АИР 56 А4 АИР 56 В4 АИР 63А4		0,12 0,18 0,25	1050 1080 1150	25
5		04 09 14	АИР 56 А4 АИР 56 В4 АИР 63 А4		0,12 0,18 0,25	1200 1250 1300	30

No.	Fan Designation	Modification Number	Motor			Nominal capacity [m³/hour]	Weight [kg]
			Type	Rotation speed [rpm]	Power [kW]		
6	BP-80-75-2,5	15 16 19	АИР 63 А2 АИР 63 В2 АИР 71 А2	2900	0,37 0,55 0,75	1300 1380 1450	30
7		15.1 17 20	АИР 63 А2 АИР 63 В2 АИР 71 А2		0,37 0,55 0,75	1600 1630 1680	30
8	BP-80-75-2,5	18 21	АИР 63 В2 АИР 71 А2		0,55 0,75	1890 2650	30
9		22	АИР 71 А2		0,75	2260	30
10		23	АИР 71 А2		0,75	2650	30
11	BP-80-75-3,15	00 02 05	АИР 56 В4 АИР 63 А4 АИР 63 В4	1450	0,18 0,25 0,37	1300 1350 1400	36
12		01 03 06	АИР 56 В4 АИР 63 А4 АИР 63 В4		0,18 0,25 0,37	1570 1600 1650	41
13		04 07	АИР 63 А4 АИР 63 В4		0,25 0,37	1800 1900	41
14		04.1 08	АИР 63 А4 АИР 63 В4		0,25 0,37	1900 2200	41
15		09	АИР 63 В4		0,37	2500	41
16	BP-80-75-3,15	10 11 14	АИР 71 В2 АИР 80 А2 АИР 80 В2	2900	1,1 1,5 2,2	2800 2900 2950	44
17		12 15	АИР 80 А2 АИР 80 В2		1,5 2,2	2900 3500	44
18		13 16	АИР 80 А2 АИР 80 В2		1,5 2,2	3500 4100	44
19		17	АИР 80 В2		2,2	4500	44
20		18	АИР 80 В2		2,2	5500	44

CHARACTERISTICS SUMMARY DIAGRAM

1700 – 10500 m³/hour

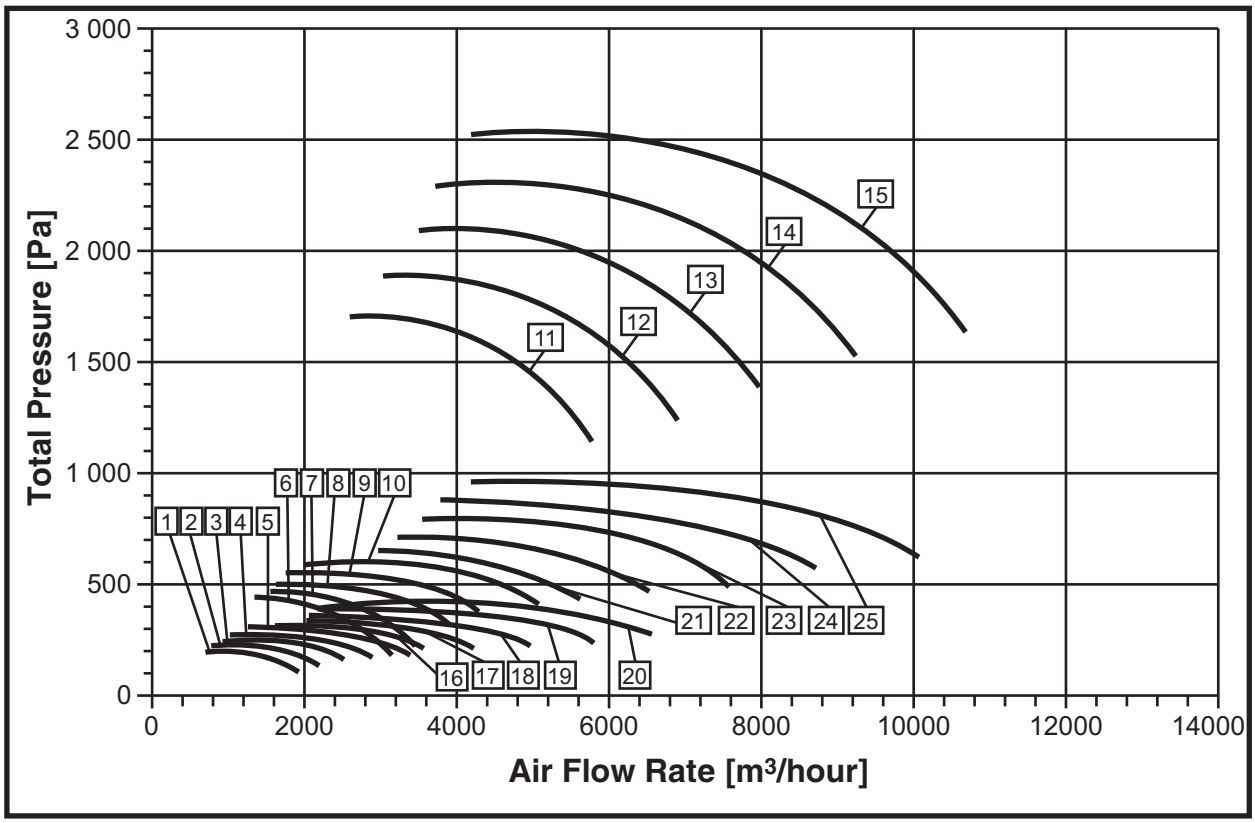

No.	Fan Designation	Modification Number	Motor			Nominal capacity [m³/hour]	Weight (max) [kg]
			Type	Rotation speed [rpm]	Power [kW]		
1	BP-80-75-4,0	00 02 05	АИР 63 А6 АИР 63 В6 АИР 71А6	950	0,18 0,25 0,37	1700 1820 1900	55
2		01 03 06	АИР 63 А6 АИР 63 В6 АИР 71А6		0,18 0,25 0,37	2000 2400 2850	55
3		04 07	АИР 63 В6 АИР 71А6		0,25 0,37	2300 2650	55
4		08	АИР 71А6		0,37	3100	55
5		09	АИР 71А6		0,37	3500	55
6	BP-80-75-4,0	10 12 15 20	АИР 71 А4 АИР 71 В4 АИР 80 А4 АИР 80 В4	1450	0,55 0,75 1,1 1,5	2500 2700 2900 3100	62
7		11 13 16 21	АИР 71 А4 АИР 71 В4 АИР 80 А4 АИР 80 В4		0,55 0,75 1,1 1,5	3000 3200 3400 3600	62

No.	Fan Designation	Modification Number	Motor			Nominal capacity [m³/hour]	Weight (max) [kg]
			Type	Rotation speed [rpm]	Power [kW]		
8	BP-80-75-4,0	14 17 22	АИР 71 B4 АИР 80 A4 АИР 80 B4	1450	0,75 1,1 1,5	3800 4000 4200	64
9		18 23	АИР 80 A4 АИР 80 B4		1,1 1,5	4500 4800	64
10		19 24	АИР 80 A4 АИР 80 B4		1,1 1,5	5000 5400	64
11	BP-80-75-4,0	25 26 29	АИР 100 S2 АИР 100 L2 АИР 112 M2	2900	4,0 5,5 7,5	5500 5900 6100	100
12		25.1 27 30	АИР 100 S2 АИР 100 L2 АИР 112 M2		4,0 5,5 7,5	6500 6900 7200	100
13		28 31	АИР 100 L2 АИР 112 M2		5,5 7,5	7800 8400	100
14		32	АИР 112 M2		7,5	8500	100
15		33	АИР 112 M2		7,5	9600	100
16	BP-80-75-5,0	00 01 04 08	АИР 71A6 АИР 71 B6 АИР 80 A6 АИР 80 B6	950	0,37 0,55 0,75 1,1	3500 3700 3800 4000	94
17		02 05 09	АИР 71 B6 АИР 80 A6 АИР 80 B6		0,55 0,75 1,1	4000 4400 4900	94
18		03 06 10	АИР 71 B6 АИР 80 A6 АИР 80 B6		0,55 0,75 1,1	4900 5200 5500	94
19		07 11	АИР 80 A6 АИР 80 B6		0,75 1,1	5700 6050	94
20		12	АИР 80 B6		1,1	6800	94
21	BP-80-75-5,0	13 14 14.5 16 20	АИР 80 A4 АИР 80 B4 АИР 80 B4 АИР 90 L4 АИР 100 S4	1450	1,1 1,5 1,5 2,2 3,0	5400 5600 5700 5900 6100	116
22		15 17 21	АИР 80 B4 АИР 90 L4 АИР 100 S4		1,5 2,2 3,0	6100 6600 6850	116
23		15.1 18 22	АИР 80 B4 АИР 90 L4 АИР 100 S4		1,5 2,2 3,0	6400 7400 7900	116
24		19 23	АИР 90 L4 АИР 100 S4		2,2 3,0	7800 9100	116
25		15.3 24	АИР 80 B4 АИР 100 S4		1,5 3,0	9500 10500	116

CHARACTERISTICS SUMMARY DIAGRAM

7300 – 44100 m³/hour

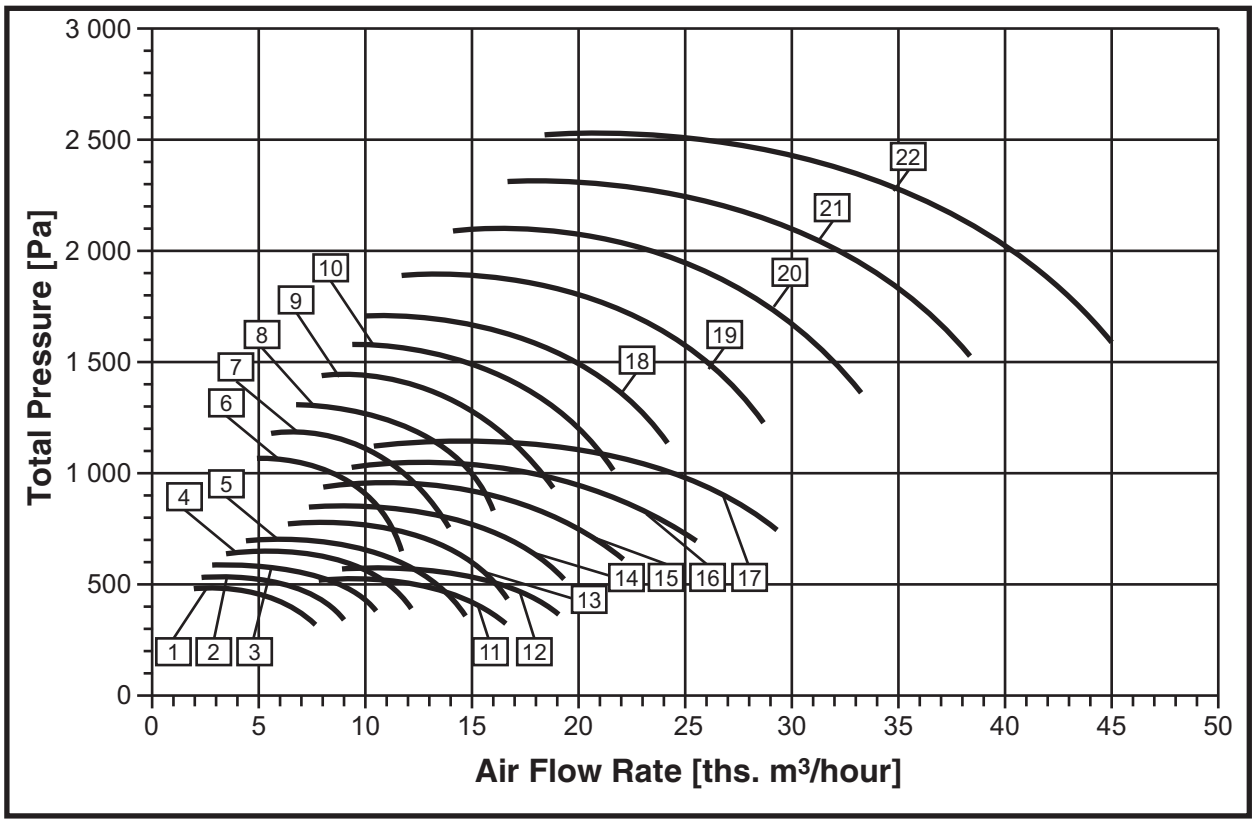

No.	Fan Designation	Modification Number	Motor			Nominal capacity [m³/hour]	Weight (max) [kg]
			Type	Rotation speed [rpm]	Power [kW]		
1	BP-80-75-6,3	00 01 03 07	АИР 80 В6 АИР 90 L6 АИР 100 L6 АИР 112 МА6	950	1,1 1,5 2,2 3,0	7300 7500 7700 7800	186
2		02 04 08	АИР 90 L6 АИР 100 L6 АИР 112 МА6		1,5 2,2 3,0	8800 9000 9150	186
3		02.1 05 09	АИР 90 L6 АИР 100 L6 АИР 112 МА6		1,5 2,2 3,0	9000 9900 10600	186
4		06 10	АИР 100 L6 АИР 112 МА6		2,2 3,0	12050 12300	186
5		11	АИР 112 МА6		3,0	14100	186

No.	Fan Designation	Modification Number	Motor			Nominal capacity [m³/hour]	Weight (max) [kg]
			Type	Rotation speed [rpm]	Power [kW]		
6	BP-80-75-6,3	12 13 16 20	АИР 100 L4 АИР 112 M4 АИР 132 S4 АИР 132 M4	1450	4,0 5,5 7,5 11,0	11300 11420 11620 11750	227
7		14 17 21	АИР 112 M4 АИР 132 S4 АИР 132 M4		5,5 7,5 11,0	13500 13680 13820	227
8		15 18 22	АИР 112 M4 АИР 132 S4 АИР 132 M4		5,5 7,5 11,0	11800 16000 16100	227
9		19 23	АИР 132 S4 АИР 132 M4		7,5 11,0	15000 18650	227
10		19	АИР 132 M4		11,0	21500	227
11	BP-80-75-8,0	00 23	АИР 112 MA8 АИР 112 MB8	740	2,2 3,0	11930 16200	267
12		01 02	АИР 112 MA8 АИР 112 MB8		2,2 3,0	15650 18850	287
13	BP-80-75-8,0	03 03.5 05 08 12	АИР 112 MA6 АИР 112 MB6 АИР 132 S6 АИР 132 M6 АИР 160 S6	950	3,0 4,0 5,5 7,5 11,0	11650 11870 14800 15500 16100	344
14		04 06 09 13	АИР 112 MB6 АИР 132 S6 АИР 132 M6 АИР 160 S6		4,0 5,5 7,5 11,0	13960 17630 18720 19000	344
15		07 10 14	АИР 132 S6 АИР 132 M6 АИР 160 S6		5,5 7,5 11,0	16350 21730 22100	344
16		11 15	АИР 132 M6 АИР 160 S6		7,5 11,0	21660 25550	344
17		16	АИР 160 S6		11,0	29360	344
18	BP-80-75-8,0	17 18	АИР 132 M4 АИР 160 S4	1450	11,0 15,0	17600 24120	340
19		19 19.5	АИР 160 S4 АИР 160 M4		15,0 18,5	26680 28400	350
20		20	АИР 160 M4		18,5	33370	350
21		21	АИР 180 S4		22,0	38400	380
22		22	АИР 180 M4		30,0	44100	410

CHARACTERISTICS SUMMARY DIAGRAM

16580 – 84400 m³/hour

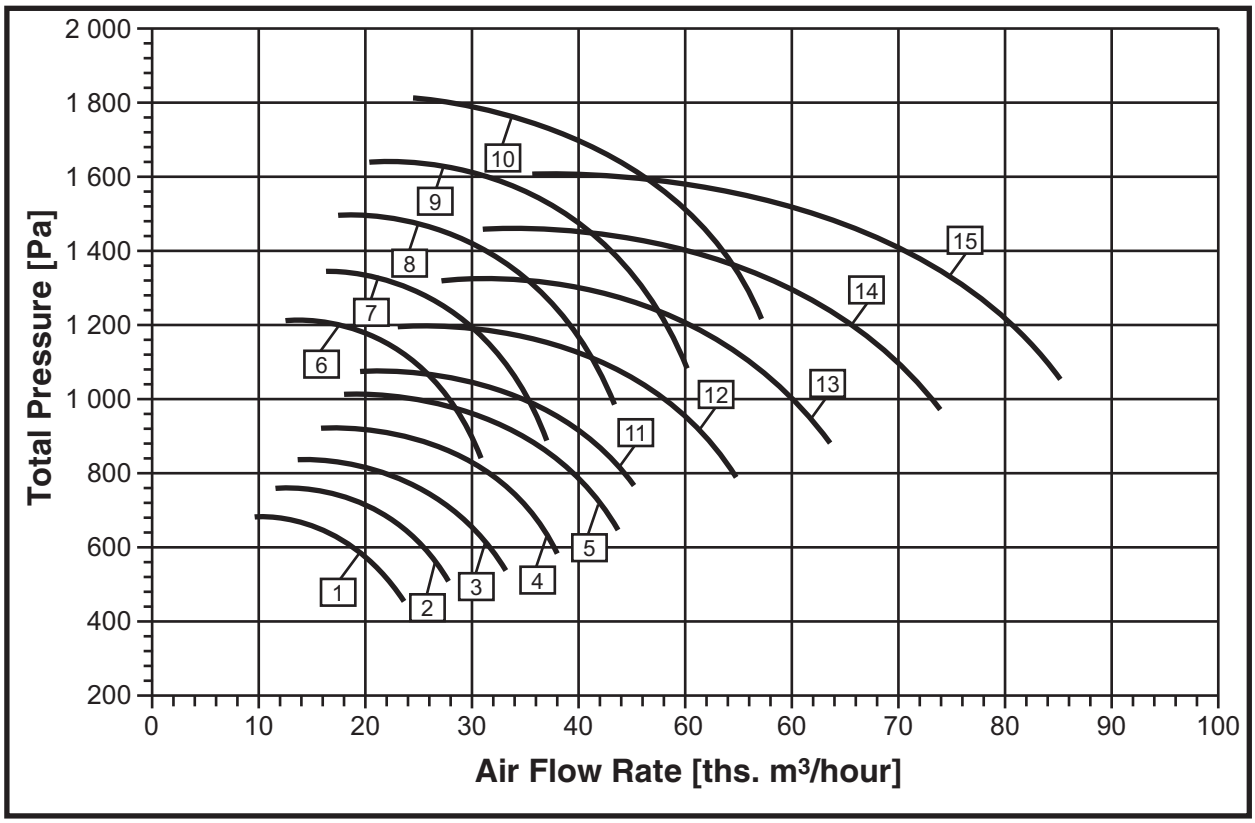

No.	Fan Designation	Modification Number	Motor			Nominal capacity [m³/hour]	Weight (max) [kg]
			Type	Rotation speed [rpm]	Power [kW]		
1	BP-80-75-10,0	00 01 03 06	АИР 132 S8 АИР 132 M8 АИР 160 S8 АИР 160 M8	740	4,0 5,5 7,5 11,0	16580 19500 22000 23600	613
2		02 04 07	АИР 132 M8 АИР 160 S8 АИР 160 M8		5,5 7,5 11,0	21500 23570 27750	613
3		00.2 05 08	АИР 132 S8 АИР 160 S8 АИР 160 M8		4,0 7,5 11,0	25200 30800 32500	613
4		09 25	АИР 160 M8 АИР 132 M8		11,0 5,5	37500 35650	313
5		10 23 24	АИР 160 M8 АИР 160 S8 АИР 132 M8		11,0 7,5 5,5	43100 40200 36700	613

No.	Fan Designation	Modification Number	Motor			Nominal capacity [m³/hour]	Weight (max) [kg]
			Type	Rotation speed [rpm]	Power [kW]		
6	BP-80-75-10,0	11 12 15 18	АИР 160 S6 АИР 160 M6 АИР 180 M6 АИР 200 M6	950	11,0 15,0 18,5 22,0	27480 29400 30300 31800	663
7		13 16 19	АИР 160 M6 АИР 180 M6 АИР 200 M6		15,0 18,5 22,0	32940 34500 37400	663
8		11.2 14 17 20	АИР 160 S6 АИР 160 M6 АИР 180 M6 АИР 200 M6		11,0 15,0 18,5 22,0	25400 29600 34710 43600	663
9		21	АИР 200 M6		22,0	48500	663
10		22	АИР 200 L6		30,0	56160	663
11	BP-80-75-12,5	00 01 02 04 07 11	АИР 160 M8 АИР 180 M8 АИР 200 M8 АИР 200 L8 АИР 225 M8 АИР 250 S8	740	11,0 15,0 18,5 22,0 30,0 37,0	26300 32200 36500 41200 43300 46500	1120
12		03 05 08 12	АИР 200 M8 АИР 200 L8 АИР 225 M8 АИР 250 S8		18,5 22,0 30,0 37,0	39280 44360 48750 54360	1120
13		06 09 13	АИР 200 L8 АИР 225 M8 АИР 250 S8		22,0 30,0 37,0	45400 53410 63800	1120
14		10 14	АИР 225 M8 АИР 250 S8		30,0 37,0	58850 73800	1120
15		15	АИР 250 S8		37,0	84400	1120

Manufactured in accordance with TU 4861-025-64600223-13

950 – 60000 m³/hour

Radial fans ВР-280-46 (VR-280-46) are used in HVAC applications of industrial, public, and residential buildings with ductwork.

VR-280-46 fans are equipped with radial impellers with forward-curved blades directly actuated by general purpose industrial three-phase induction motors.

Fans VR-280-46:

◆ available in right-handed and left-handed versions.

Automatic Control System see p.182.

Explosion-proof version is available.

Fans are denoted as follows:

ВР – 280 – 46 – 6,3Н – 00 – ПР90° – У2

- У2 – Climatic version;
- ПР90° – Rotating direction and housing positioning;
- 00 – Modification index number;
- Н – Design variant;
- 6,3 – Impeller diameter in decimeters;
- 46 – Aerodynamic configuration index;
- ВР – Fan type (Radial fan).

Fan cases may be mounted in any position shown on Figure 1.

Suction side view

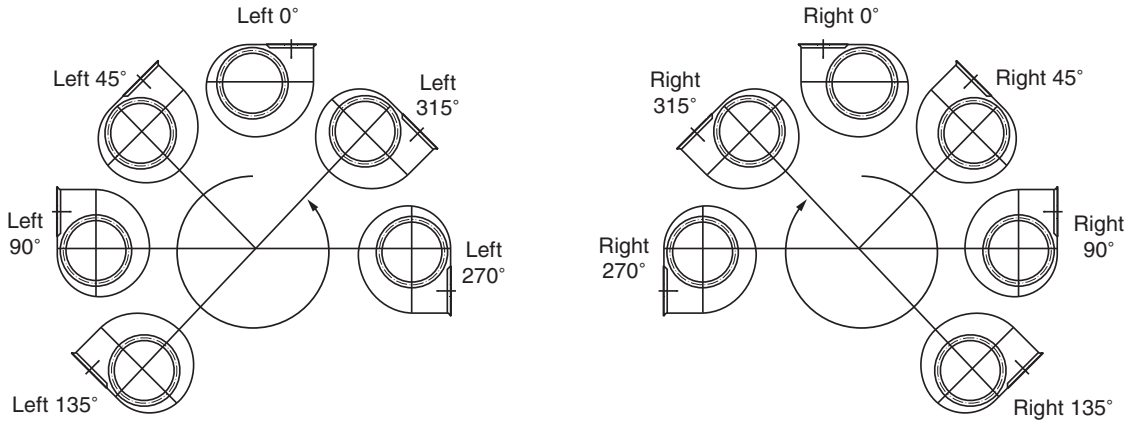

Left-handed rotation

Right-handed rotation

Fig. 1 Fan case position

Fans are used in conditions of moderate climate (У), boreal climate (УХЛ), cold climate (ХЛ), tropical dry climate (ТС), tropical humid climate (ТВ), and tropical coastal climate (ТМ) of the second category of location according to GOST 15150.

It is allowed operating fans according to the first category of location provided special appliances and motor weather protection (see pp.169-170).

ВР-280-46-2,5.. ,8Н – general purpose;
ВР-280-46-2,5Ж.8Ж – general purpose, heat-resistant;
ВР-280-46-2,5К1...8К1 – corrosion-proof;
ВР-280-46-2,5К1Ж...8К1Ж – corrosion-proof, heat-resistant;
ВР-280-46-2,5В...8В – explosion-proof, made of dissimilar metals;
ВР-280-46-2,5ВЖ...8ВЖ – explosion-proof, heat-resistant, made of dissimilar metals;
ВР-280-46-2,5В2...8В2 – explosion-proof;
ВР-280-46-2,5ВК1...8ВК1 – explosion-proof, corrosion-proof;
ВР-280-46-2,5ВК1Ж...8ВК1Ж – explosion-proof, corrosion-proof, heat-resistant.

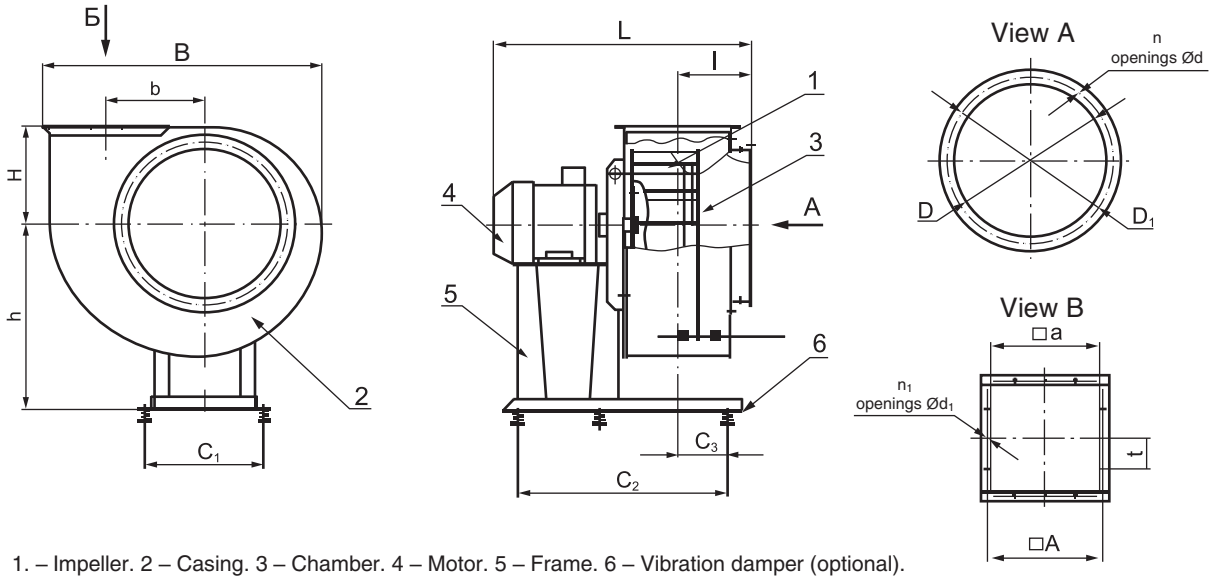

1. – Impeller. 2 – Casing. 3 – Chamber. 4 – Motor. 5 – Frame. 6 – Vibration damper (optional).

Fig. 2 Overall and connection dimensions [mm]

Designation	BP-280-46 (VR-280-46) No. 2,5	BP-280-46 (VR-280-46) No. 3,15	BP-280-46 (VR-280-46) No. 4	BP-280-46 (VR-280-46) No. 5	BP-280-46 (VR-280-46) No. 6,3	BP-280-46 (VR-280-46) No. 8
B	465	580	730	915	1145	1450
L_{max}	625	625	820	1025	1250	1500
H	200	240	290	340	420	535
b	162,5	203	260	325	410	520
l	132	162	182	225	300	370
h	320	410	520	650	720	905
D	250	315	400	500	630	800
D_1	280	345	430	530	660	850
d	7	7	7	7	7	11
n	8	8	8	16	16	16
A	200	255	310	370	470	600
a	175	220	280	350	440	560
t	100	100	100	100	100	150
d_1	7x10	7x10	7x10	7x10	7x10	10x16
n_1	8	12	12	16	20	16
C_1	280	280	350	480	480	660
C_2	514	530	640	920	660	1150
C_3	200	220	270	340	430	500

BP-280-46 (VR-280-46) Fans Noise Performance

Fan Designation	RPM	Octave sound-power levels [dB] in center frequency bands [Hz]						
		125	250	500	1000	2000	4000	8000
BP-280-46-2,5	1450	74	78	80	76	72	67	59
	2950	93	97	99	95	91	86	78
BP-280-46-3,15	950	73	77	79	75	71	66	58
	1450	82	86	88	84	80	75	67
BP-280-46-4	950	80	84	86	82	78	73	65
	1450	91	95	97	93	89	84	76
BP-280-46-5	950	88	92	94	90	86	81	73
	1450	98	102	104	100	96	91	83
BP-280-46-6,3	740	89	93	95	91	87	82	74
	950	97	101	103	99	95	90	82
BP-280-46-8	740	97	101	103	99	95	90	82
	950	104	108	110	106	102	97	89

CHARACTERISTICS SUMMARY DIAGRAM

1700 – 11200 m³/hour

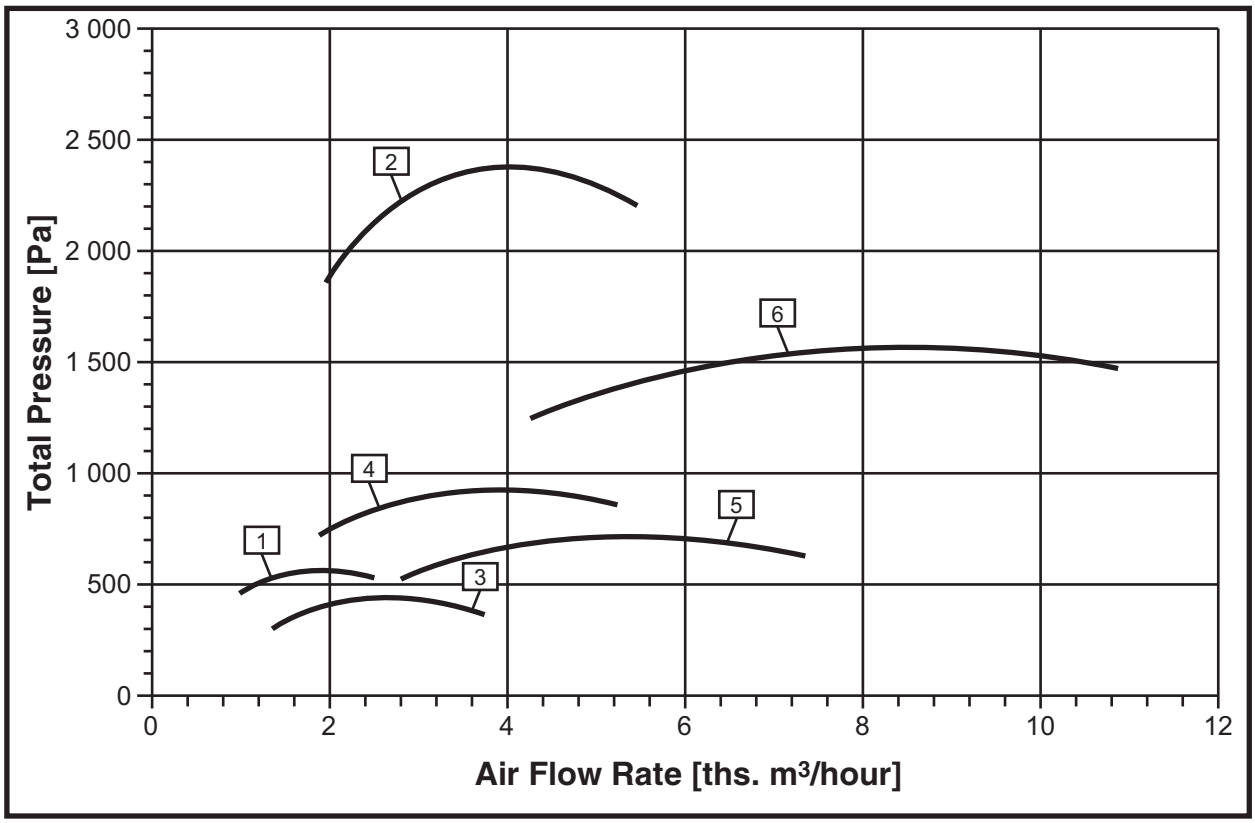

No.	Fan Designation	Modification Number	Motor			Nominal capacity [m³/hour]	Weight [kg]
			Type	Rotation speed [rpm]	Power [kW]		
1	BP-280-46-2,5	00	63B4	1450	0,37	1700	29
		01	71A4	1450	0,55	2400	34
		02	71B4	1450	0,75	2700	35
2		03	80B2	2950	2,2	2400	41
		04	90L2	2950	3	3100	45
		05	100S2	2950	4	4000	51
		06	100L2	2950	5,5	5250	57
3	BP-280-46-3,15	00	71A6	950	0,37	2300	40
		01	71B6	950	0,55	3200	44
		02	80A6	950	0,75	3600	47
4		03	80A4	1450	1,1	2980	47
		04	80B4	1450	1,5	3900	52
		05	90L4	1450	2,2	5400	54
5	BP-280-46-4	00	80B6	950	1,1	3600	61
		01	90L6	950	1,5	5200	65
		02	100L6	950	2,2	7400	73
6		03	100L4	1450	4	6600	74
		04	112M4	1450	5,5	8500	104
		05	132S4	1450	7,5	11200	115

CHARACTERISTICS SUMMARY DIAGRAM

8000 – 45000 m³/hour

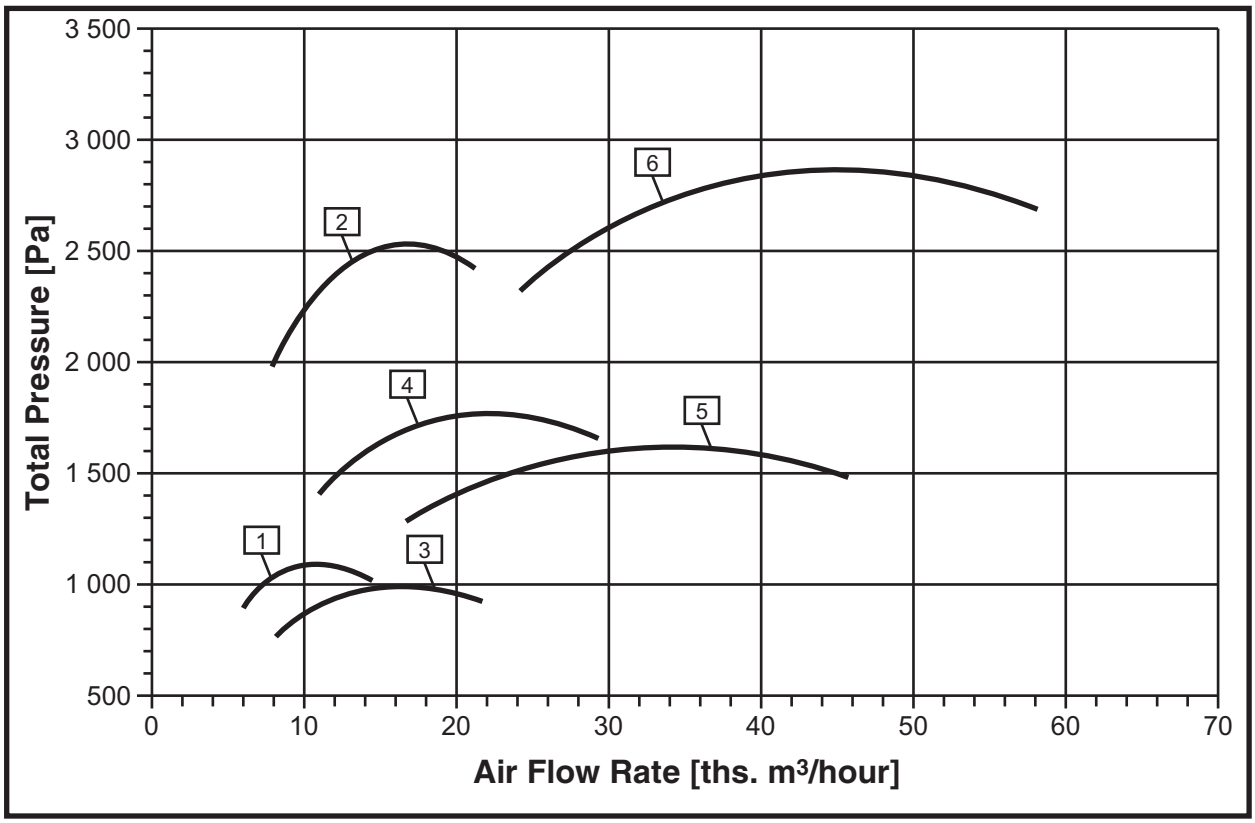

No.	Fan Designation	Modification Number	Motor			Nominal capacity [m³/hour]	Weight [kg]
			Type	Rotation speed [rpm]	Power [kW]		
1	BP-280-46-5	00	112MB6	950	4	8000	128
		01	132S6	950	5,5	12500	149
		02	132M6	950	7,5	14900	162
2		03	132M4	1450	11	11200	164
		04	160S4	1450	15	14500	210
		05	160M4	1450	18,5	17400	225
		06	180S4	1450	22	20500	250
		07	180M4	1450	30	23000	270
3	BP-280-46-6,3	00	132S8	745	4	9500	169
		01	132M8	745	5,5	13000	178
		02	160S8	745	7,5	19000	253
		03	160M8	745	11	23000	263
4		04	160S6	950	11	15600	283
		05	160M6	950	15	20500	304
		06	180M6	950	18,5	24000	340
		07	200M6	950	22	27700	403
		08	200L6	950	30	32000	457
5	BP-280-46-8	00	180M8	745	15	22000	376
		01	200M8	745	18,5	26500	431
		02	200L8	745	22	32000	471
		03	225M8	745	30	42000	521
		04	250S8	745	37	48000	566
6		05	200L6	950	30	27000	601
		06	225M6	950	37	32000	632
		07	250S6	950	45	38000	746
		08	250M6	950	55	45000	801

Manufactured in accordance with TU 4861-032-64600223-13

500 – 25000 m³/hour

- Single-way suction;
- Helical-type turning housing;
- Radial blades;
- 6-blade design;
- Right-handed or left-handed rotation

Automatic Control System see p.182.

Fans are denoted as follows:

ВР – 140 – 40 – 6,3П – 00 – Пр90 – У2

- Climatic version;
- Rotating direction and housing positioning;
- Modification index number;
- Design variant:
  - П – dust-exhaust, general purpose;
  - ПВ – dust-exhaust, general purpose, explosion-proof;
  - ПК – dust-exhaust, corrosion-proof;
  - ПВК – dust-exhaust, explosion-proof, corrosion-proof;
- Impeller diameter in decimeters;
- Aerodynamic configuration index;
- Fan type (Radial fan).

This type of fans is applied in HVAC systems as well as in other industrial applications: dust-trapping units, pressure-pneumatic systems, wood dust and chips removal from woodworking machines, metal dust removal from metalworking machines, grain and grain run-off transportation.

Fans are used for operation in temperate (У), tropical (Т, ТВ, ТС), or cold (ХЛ, УХЛ) climate conditions of 2nd category of location according to GOST 15150.

It is allowed operating fans according to the first category of location provided special appliances and motor weather protection (see pp.169-170).

Fan cases may be mounted in any position shown on Figure 1.

Suction side view

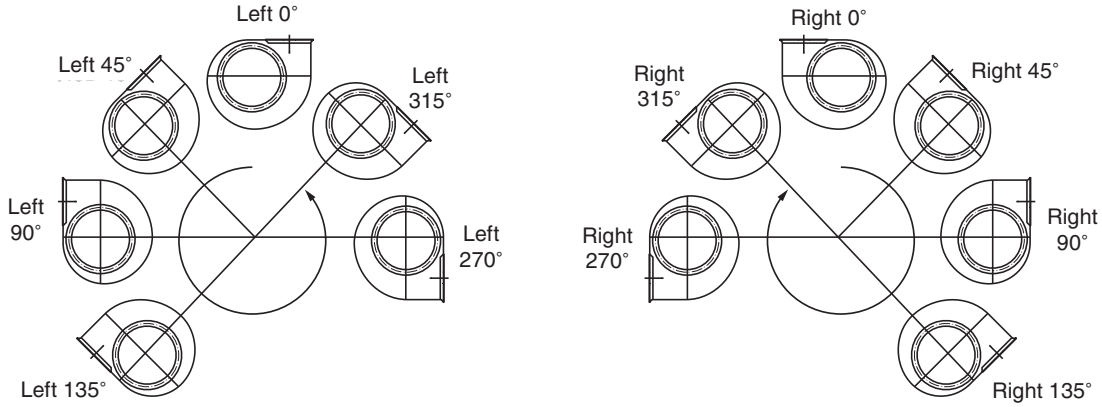

Left-handed rotation

Right-handed rotation

Fig. 1 Fan case position

Fans overall and connection dimensions [mm]:

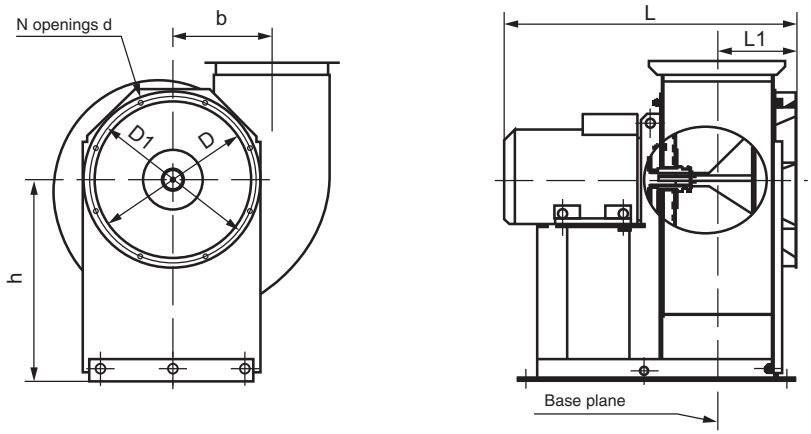

For fans No. 2,5; 3,15; 4.

Outlet piece

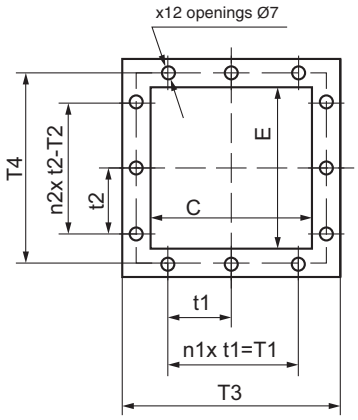

Location of openings for fan mounting

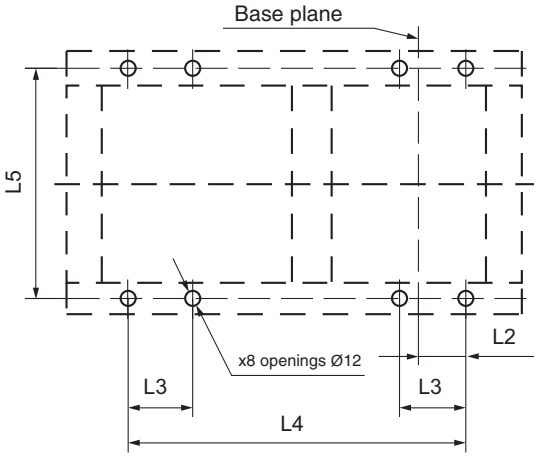

Fan No.	Dimensions [mm]										
	D	D1	d	C	E	b	h	Lmax	L1	L2	L3
2,5	140	170	7	175	150	162.5	300	445	106	24	80
3,15	215	245	7	221	189	205	395	515	132	55	80
4	264	294	7	280	240	260	520	690	168	93	10

Fan No.	Dimensions [mm]								N	n_1	n_2
	L4	L5	t1	t2	T1	T2	T3	T4			
2,5	282	220	65	65	130	130	209	168	12	2	2
3,15	348	226	84	75	168	150	254	221	12	2	2
4	463	290	110	95	220	190	320	285	12	2	2

For fans No. 5; 6,3; 8.

Outlet piece

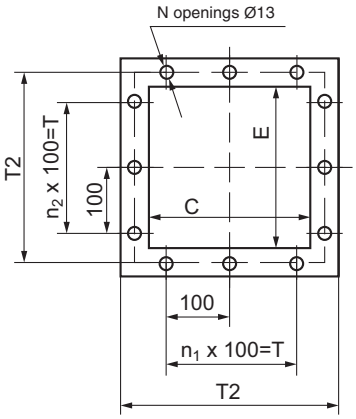

Location of openings for fan mounting

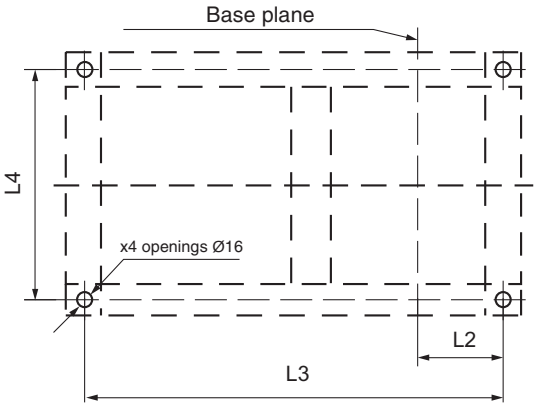

Fan No.	Dimensions [mm]										
	D	D1	d	C	E	b	h	Lmax	L1	L2	L3
5	350	390	13	300	300	250	550	850	250	182	630
6,3	440	500	13	378	378	315	670	1070	303	219	810
8	560	610	13	480	480	400	845	1350	388	287	1078

Fan No.	Dimensions [mm]			N	n_1	n_2
	L4	T	T2			
5	410	200	342	8	12	2
6,3	502	300	418	8	16	3
8	690	400	520	12	20	4

FAN AERODYNAMIC PERFORMANCE:

500 – 25000 m³/hour

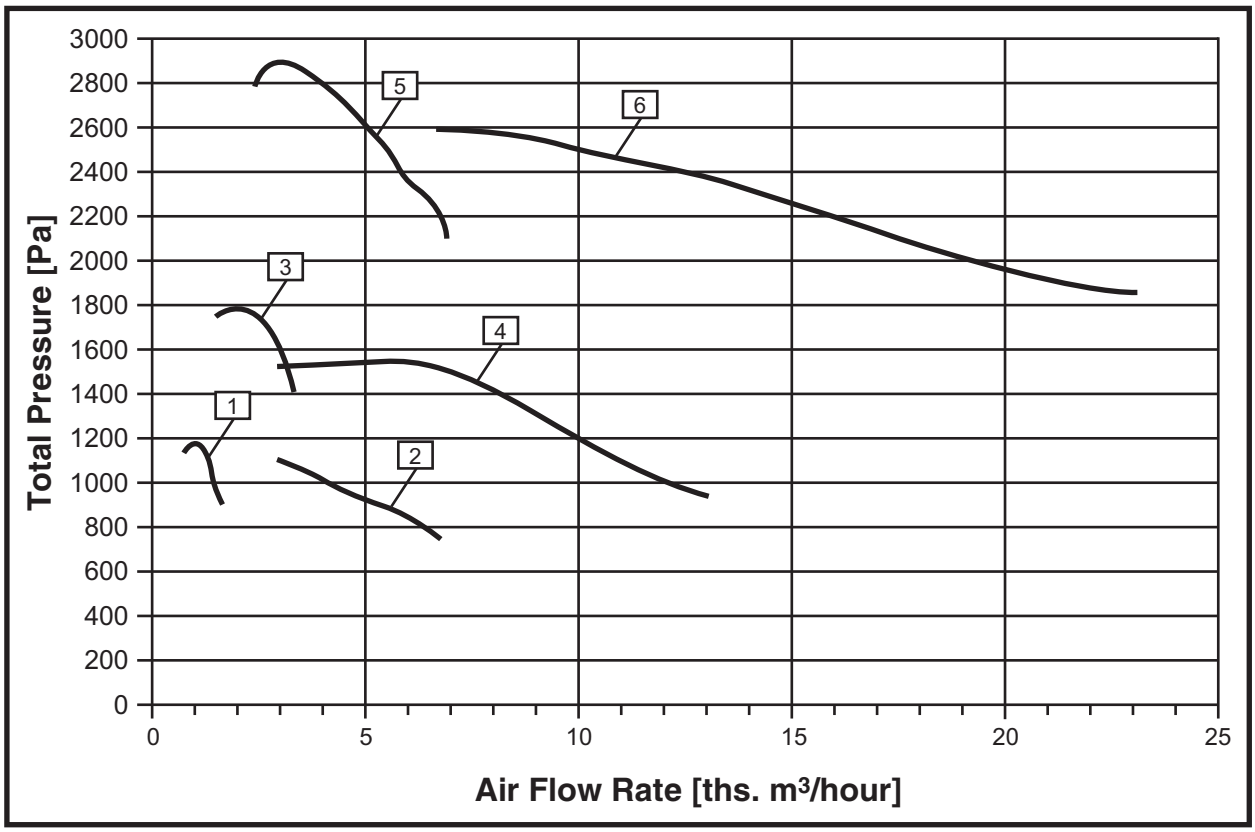

No.	Fan Model	Modification No.	Motor			Fan Weight [kg]
			Type	Rotation speed [rpm]	Power [kW]	
1	BP-140-40-2,5	00	АИР80МВ2	2850	2,2	24,5
2	BP-140-40-3,15	00	АИР90L2	2850	3,0	37
		01	АИР100S2	2850	4,0	38
3	BP-140-40-4	00	АИР100L2	2850	5,5	70,5
		01	АИР112М2	2850	7,5	81
4	BP-140-40-5	00	АИР132S4	1450	7,5	182
		01	АИР132М4	1450	11,0	220
5	BP-140-40-6,3	00	АИР132М4	1450	11,0	245
		01	АИР160S4	1450	15,0	285
6	BP-140-40-8	01	АИР180S4	1450	22,0	427
		02	АИР180М4	1450	30,0	427

Manufactured in accordance with TU 4861-024-64600223-13

500 – 40000 m³/hour

Fans may be applied to supply relatively low volume of air under pressure of up to 10,000Pa. These fans are characterized by considerably high efficiency.

High-pressure radial fans are used as blowers, or for delivery pressure-pneumatic systems, etc.

VR-120-28 fans are available in:

◆ right-handed rotation and left-handed rotation versions.

Automatic Control System see p.182.

Fans are denoted as follows:

BP – 120 – 28 – 6,3H – 00 – ПР90° – У2

- У2 – Climatic version;
- ПР90° – Rotating direction and housing positioning;
- 00 – Modification index number;
- H – Design variant;
- 6,3 – Impeller diameter in decimeters;
- 28 – Aerodynamic configuration index;
- BP – Fan type (Radial fan).

Fan cases may be mounted in any position shown on Figure 1.

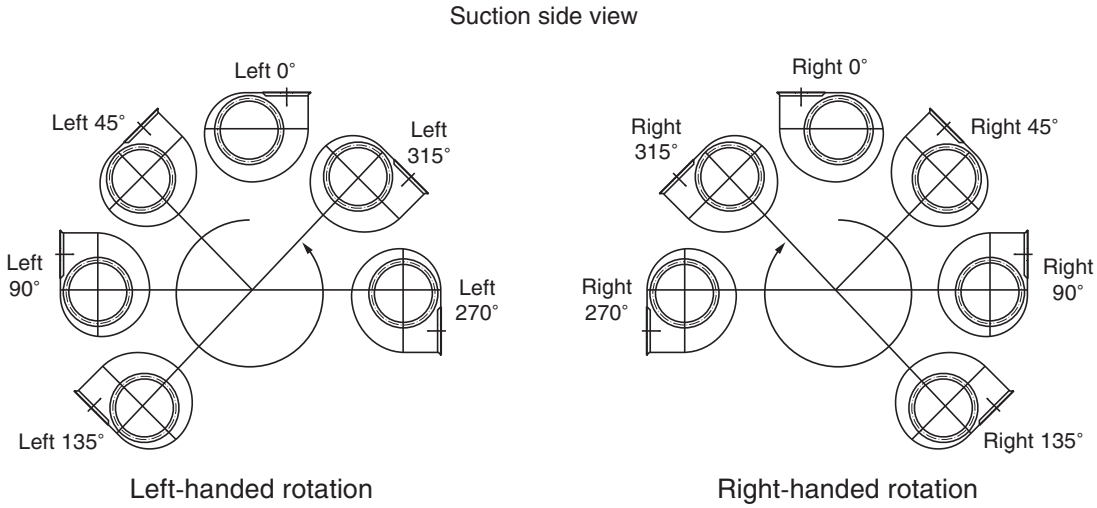

Fig. 1 Fan case position

Fans are used in conditions of moderate climate (У), boreal climate (УХЛ), cold climate (ХЛ), tropical dry climate (ТС), tropical humid climate (ТВ), and tropical coastal climate (ТМ) of the second category of location according to GOST 15150.

It is allowed operating fans according to the first category of location provided special appliances and motor weather protection (see pp.169-170).

BP-120-28-5...10H – general purpose;
BP-120-28-5Ж...10Ж – general purpose, heat-resistant;
BP-120-28-5K1...10K1 – corrosion-proof;
BP-120-28-5K1Ж...10K1Ж – corrosion-proof, heat-resistant;
BP-120-28-5B...10B – explosion-proof, made of dissimilar metals;
BP-120-28-5BЖ...10BЖ – explosion-proof, heat-resistant, made of dissimilar metals;
BP-120-28-5B2...10B2 – explosion-proof;
BP-120-28-5BK1...10BK1 – explosion-proof, corrosion-proof;
BP-120-28-5BK1Ж...10BK1Ж – explosion-proof, corrosion-proof, heat-resistant.

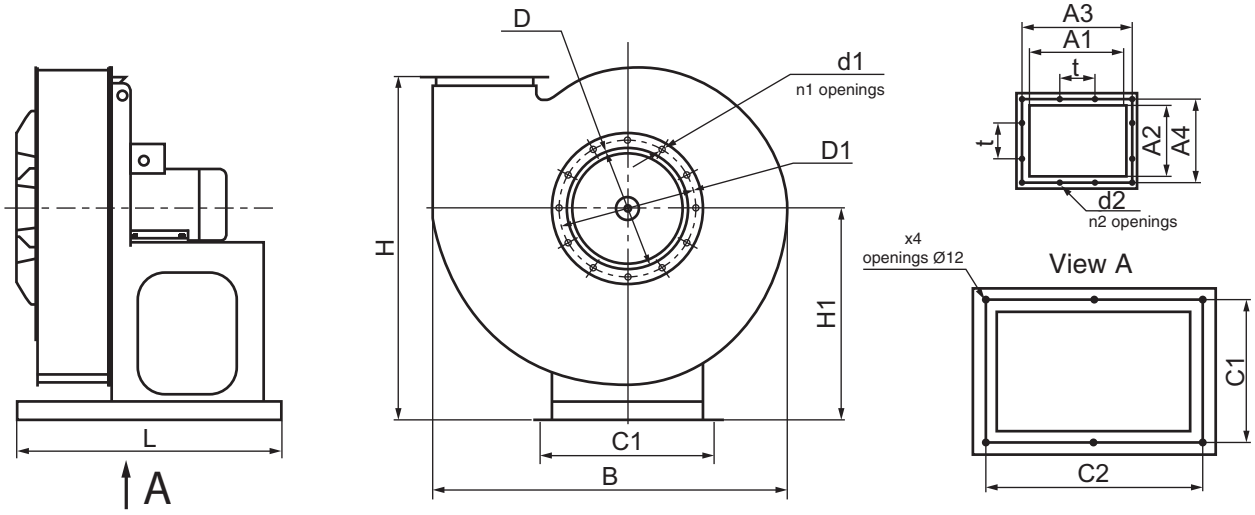

Fig. 2 Overall and connection dimensions [mm]

Designation	BP-120-28 №5	BP-120-28 №6,3	BP-120-28 №8	BP-120-28 №10
B	766	968	1208	1510
L	683	846	945	1110
H	756	1038	1205	1475
b	300	378	480	600
l	120	140	200	250
h	450	650	700	850
D	200	316	320	400
D1	280	360	430	540
d	7	7	7	9
n	8	8	8	8
A1	200	252	320	400
A2	150	189	240	300
t	100	100	100	120
d1	9	9	13	13
n1	12	12	12	16
C1	340	460	480	480
C2	400	550	580	670
d2	15	15	24	24
A2	250	300	380	460
A3	100	240	300	360
n2	10	10	14	14

CHARACTERISTICS SUMMARY DIAGRAM

2150 – 12425 m³/hour

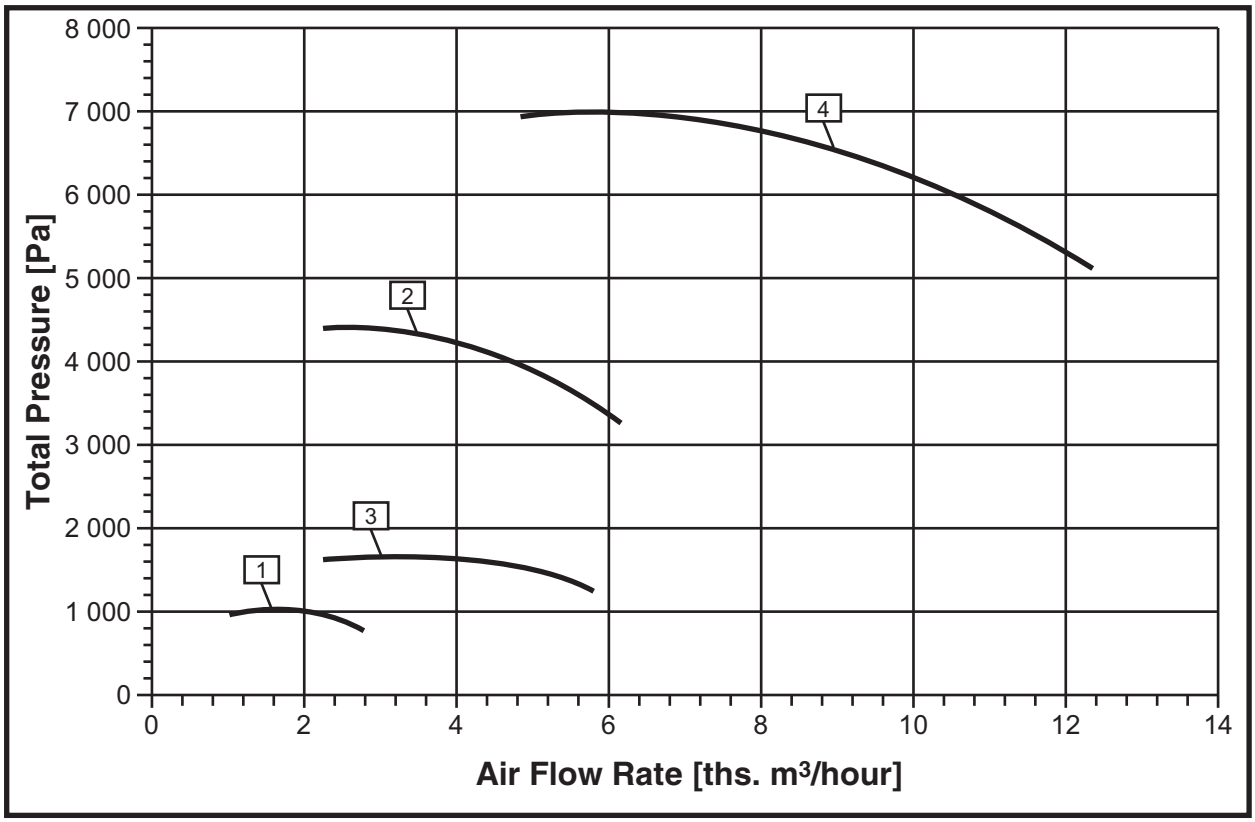

No.	Fan Designation	Modification Number	Motor			Air Handling Capacity [m³/hour]	Weight [kg]
			Motor Type	Rotation Speed [rpm]	Installed power [kW]		
1	BP-120-28-5	00	71B4	1500	0,75	2150	59
		01	80A4	1500	1,1	2970	63
		02	80B4	1500	1,5	2970	65
2		03	100L2	3000	5,5	3240	77
		04	112M2	3000	7,5	4700	98
		05	132M2	3000	11	6190	103
3	BP-120-28-6,3	00	90L4	1500	2,2	3470	122
		01	100S4	1500	3	5285	126
		02	100L4	1500	4	6005	142
4		03	160S2	3000	15	5035	221
		04	160M2	3000	18,5	6615	235
		05	180S2	3000	22	8155	255
		06	180M2	3000	30	12425	275

CHARACTERISTICS SUMMARY DIAGRAM

4650 – 25025 m³/hour

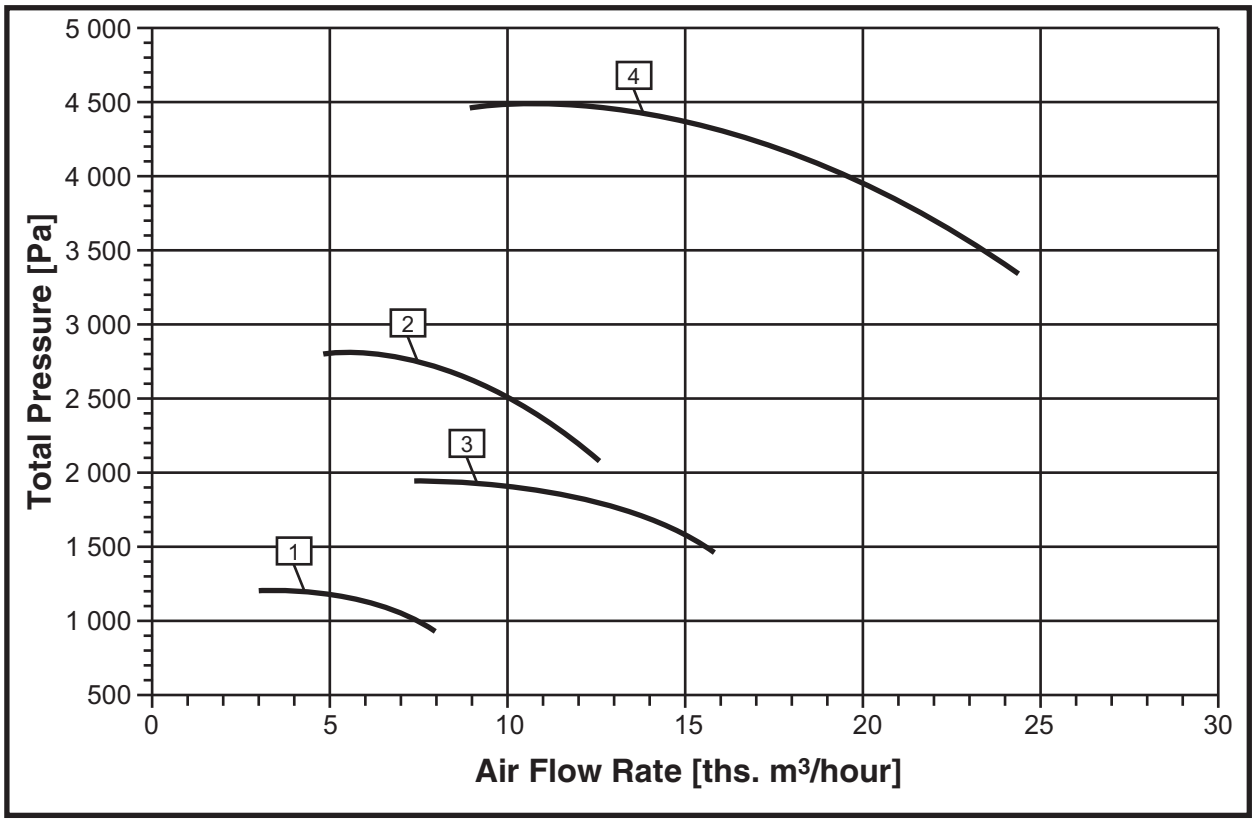

No.	Fan Designation	Modification Number	Motor			Air Handling Capacity [m³/hour]	Weight [kg]
			Motor Type	Rotation Speed [rpm]	Installed power [kW]		
1	BP-120-28-8	00	100L6	1000	2,2	4650	204
		01	112MA6	1000	3	7160	211
		02	112MB6	1000	4	8280	220
2		03	112M4	1500	5,5	4630	215
		04	132S4	1500	7,5	6765	222
		05	132M4	1500	11	11625	230
		06	160S4	1500	15	12680	295
3	BP-120-28-10	00	132S6	1000	5,5	6810	361
		01	132M6	1000	7,5	10055	366
		02	160S6	1000	11	16515	430
4		03	160M4	1500	18,5	9815	447
		04	180S4	1500	22	12025	465
		05	180M4	1500	30	17820	495
		06	200M4	1500	37	25025	535

Manufactured in accordance with TU 4861-033-64600223-13

500 – 110000 m³/hour

Fans are designed for mounting on a roof as a part of general ventilation system.

Fans are used for operation in temperate (У), tropical (Т, ТВ, ТС), or cold (ХЛ, УХЛ) climate conditions of 1st category of location according to GOST 15150.

Automatic Control System see p.182.

Explosion-proof and/or corrosion-proof version are available.

Fans are denoted as follows:

ВРКО – А – 6,3 – ВК – 00 – У1

- У1 – Climatic Version, Installation Category;
- 00 – Version index number;
- К – Special version: K – corrosion-proof;
- В – Special version: B – explosion-proof;
- 6,3 – Impeller diameter in decimeters;
- А – Power index (А, Б, В);
- ВРКО – Fan type (Radial roof fan for general ventilation systems).

1 – Casing;
2 – Impeller;
3 – Motor;
4 – Housing;
5 – Inspection door;
6 – Chamber;
7 – Protection screen;
8 – Motor base.

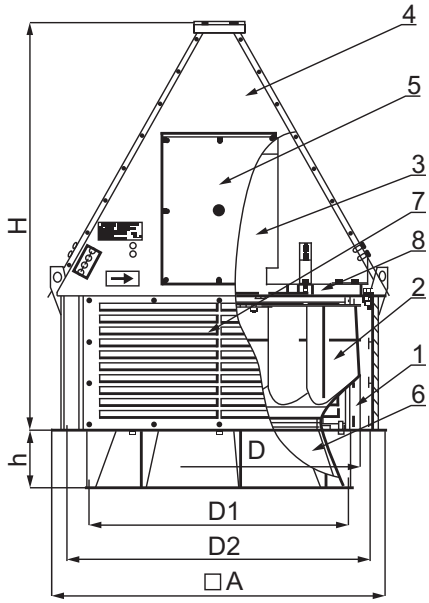

Fig. 1 Layout, Overall and Connection Dimensions [mm]

Fan Type	Dimensions [mm]							
	A	D	D1	D2	h	Hmax	d	n
BPKO-3,15	470	315	345	470	100	520	7	4
BPKO-3,55	560	355	385	585	100	620	7	4
BPKO-4	560	400	430	585	130	620	7	4
BPKO-4,5	650	450	480	665	130	680	7	6
BPKO-5	760	500	530	772	140	730	7	6
BPKO-6,3	780	630	660	772	200	920	10	6
BPKO-7,1	870	710	660	772	200	1160	10	6
BPKO-8	1050	800	830	1072	200	1200	10	8
BPKO-9	1100	900	940	1072	150	1300	10	8
BPKO-10	1300	1000	1040	1272	150	1550	10	8
BPKO-11,2	1350	1120	1165	1272	150	1700	12	12
BPKO-12,5	1550	1250	1295	1522	150	1850	12	12
BPKO-14	1680	1400	1295	1522	150	2000	12	12

Notes:
1) Dimensions are similar for all sizes of VRKO line. H_{max} dimension may exceed value specified in the table.

CHARACTERISTICS SUMMARY DIAGRAM

500 – 59000 m³/hour

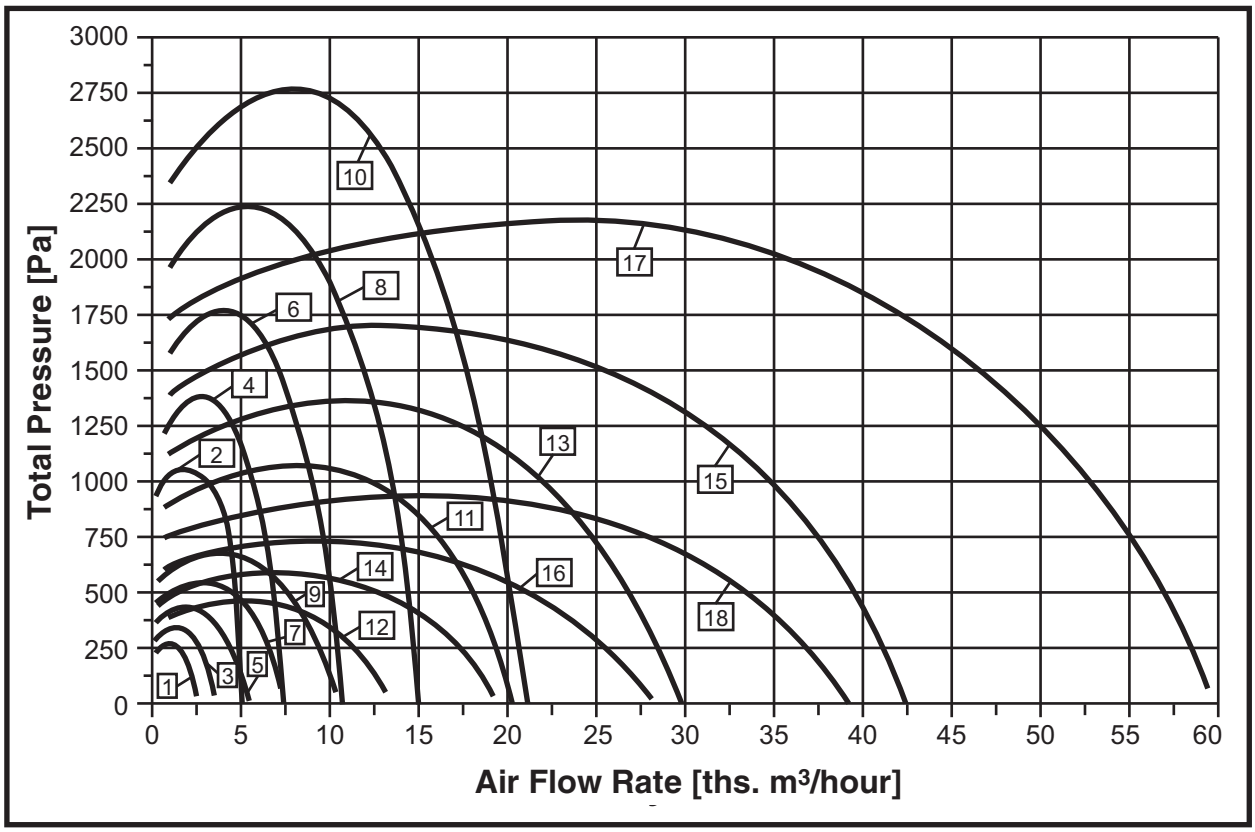

No.	Fan Model	Motor			Corrected sound power level L_{pA} [dBA]		Fan Weight [kg]
		Type	Rotation Speed [rpm]	Power [kW]	Inlet	Outlet	
1	ВРКО-А-3,15-00	АИР 56 В4	1450	0,18	67	60	21
2	ВРКО-А-3,15-01	АИР 80 А2	2950	1,5	81	73	27
3	ВРКО-А-3,55-00	АИР 63 А4	1450	0,25	70	63	30
4	ВРКО-А-3,55-01	АИР 80 В2	2950	2,2	86	78	36
5	ВРКО-А-4-00	АИР 71 А4	1450	0,55	73	66	49
6	ВРКО-А-4-01	АИР 100 L2	2950	5,5	91	83	59
7	ВРКО-А-4,5-00	АИР 80 А4	1450	1,1	78	70	55
8	ВРКО-А-4,5-01	АИР 132 М2	2950	11,0	94	87	69
9	ВРКО-А-5-00	АИР 90 L4	1450	2,2	80	73	66
10	ВРКО-А-5-01	АИР 160 М2	2950	18,5	88	80	80
11	ВРКО-А-6,3-00	АИР 112 М4	1450	5,5	88	80	114
12	ВРКО-А-6,3-01	АИР 90 L6	950	1,5	78	71	92
13	ВРКО-А-7,1-00	АИР 132 М4	1450	11,0	93	85	200
14	ВРКО-А-7,1-01	АИР 112 МА6	950	3,0	82	75	130
15	ВРКО-А-8-00	АИР 160 М4	1450	18,5	97	89	226
16	ВРКО-А-8-01	АИР 132 S6	950	5,5	86	79	172
17	ВРКО-А-9-00	АИР 200 М4	1450	37,0	100	92	254
18	ВРКО-А-9-01	АИР 160 S6	950	11,0	90	83	195

Notes:
1) Replacement of electric motor series (5АИ, 5А, etc.) is allowed without sacrificing any parameter (rpm or power) specified in the table.
2) Fan weight is provided for reference only.

CHARACTERISTICS SUMMARY DIAGRAM

4000 – 110000 m³/hour

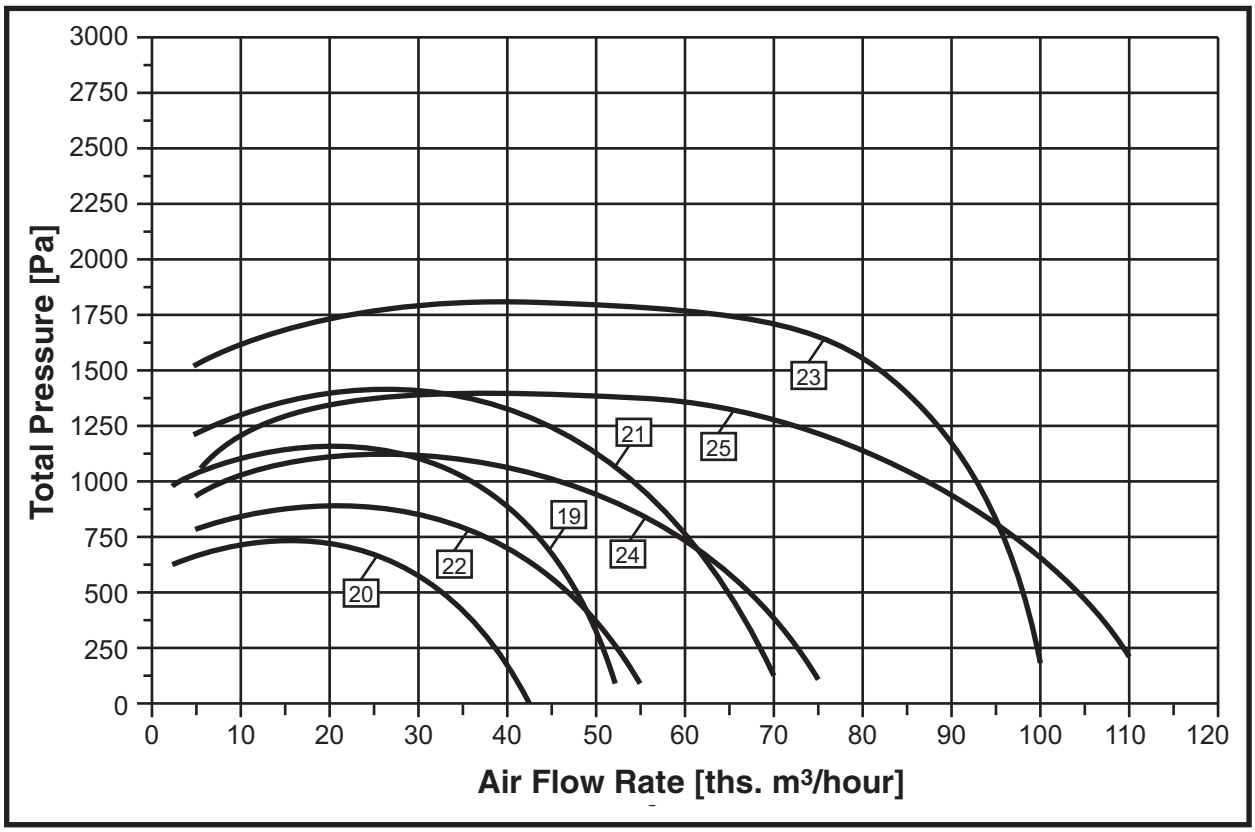

No.	Fan Model	Motor			Corrected sound power level L_{pA} [dBA]		Fan Weight [kg]
		Type	Rotation Speed [rpm]	Power [kW]	Inlet	Outlet	
19	BPKO-A-10-00	АИР 160 М6	950	18,5	95	87	238
20	BPKO-A-10-01	АИР 160 М8	745	11,0	87	80	210
21	BPKO-A-11,2-00	АИР 200 L6	950	30,0	98	90	225
22	BPKO-A-11,2-01	АИР 180 М8	745	15,0	90	83	215
23	BPKO-A-12,5-00	АИР 250 М6	950	55,0	102	94	267
24	BPKO-A-12,5-01	АИР 250 S8	745	37,0	95	87	235
25	BPKO-A-14-00	АИР 250 М8	745	45,0	100	93	280

Notes:
1) Replacement of electric motor series (5АИ, 5А, etc.) is allowed without sacrificing any parameter (rpm or power) specified in the table.
2) Fan weight is provided for reference only.

Manufactured in accordance with TU 4861-014-64600223-13

200 – 18000 m³/hour

- Impeller with backward-curved blades
- Easy-to-clean impeller surface

Specially designed hood for reduction of output noise level.

Speed adjustment by switching multi-speed motor poles (optional) or using frequency converter.

Welded steel housing and impeller with powder paint coating.

Impeller is directly driven from industrial induction motor.

Built-in motor thermal protection (optional). Impeller dynamic balancing.

See page 159 for information on supplementary fans configuration and installation notes.

Noise performance is defined in accordance with GOST 31353.3-2007 and represented by values of corrected sound power level LpA in dBA. Estimation of sound pressure level L at certain distance from a fan see on Page 56.

Automatic Control System see p.182.

Explosion-proof version is available.

Fans are denoted as follows:

ВРКШ – 3,15 – В – 2 – 3 – У1
- У1 – Climatic version;
- 3 – Number of power grid phases (3 or 1);
- 2 – Number of motor poles (2, 4, 6,);
- В – Special enclosure version (Explosion-proof);
- 3,15 – Impeller diameter in decimeters;
- Ш – Enclosure code: Ш – Noisless;
- ВРКШ – Fan type (В – fan, P – Radial, K – roof).

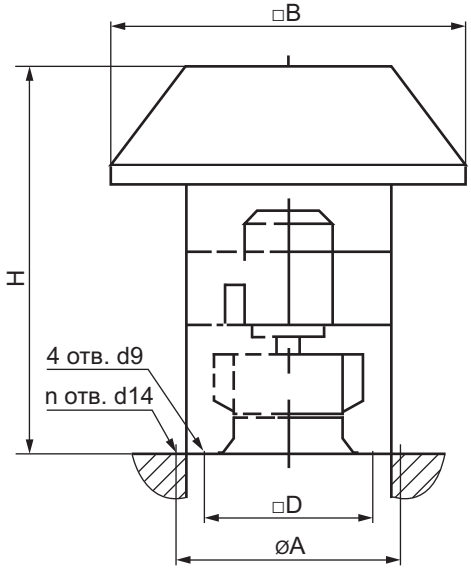

No.	Fan Model	Dimensions [mm]				
		A	D	B	H	n
1	ВРКШ-1,6-2	470	220	460	450	4
2	ВРКШ-2-2	470	245	510	510	4
3	ВРКШ-2,5-4	585	300	730	615	4
4	ВРКШ-2,8-4	615	300	730	650	4
5	ВРКШ-3,15-4	665	375	780	725	8
6	ВРКШ-3,55-4	655	375	925	750	8
7	ВРКШ-4-6	772	375	985	840	8
8	ВРКШ-4-4	772	375	985	840	8
9	ВРКШ-4,5-6	772	470	1055	895	8
10	ВРКШ-4,5-4	772	470	1055	895	8
11	ВРКШ-5-6	1188	470	1200	1000	4
12	ВРКШ-5-4	1188	470	1200	1000	4
13	ВРКШ-5,6-6	1072	580	1390	1175	8
14	ВРКШ-5,6-4	1072	580	1390	1175	8
15	ВРКШ-6,3-6	1072	730	1610	1250	8
16	ВРКШ-6,3-4	1072	730	1610	1250	8

CHARACTERISTICS SUMMARY DIAGRAM

200 – 4800 m³/hour

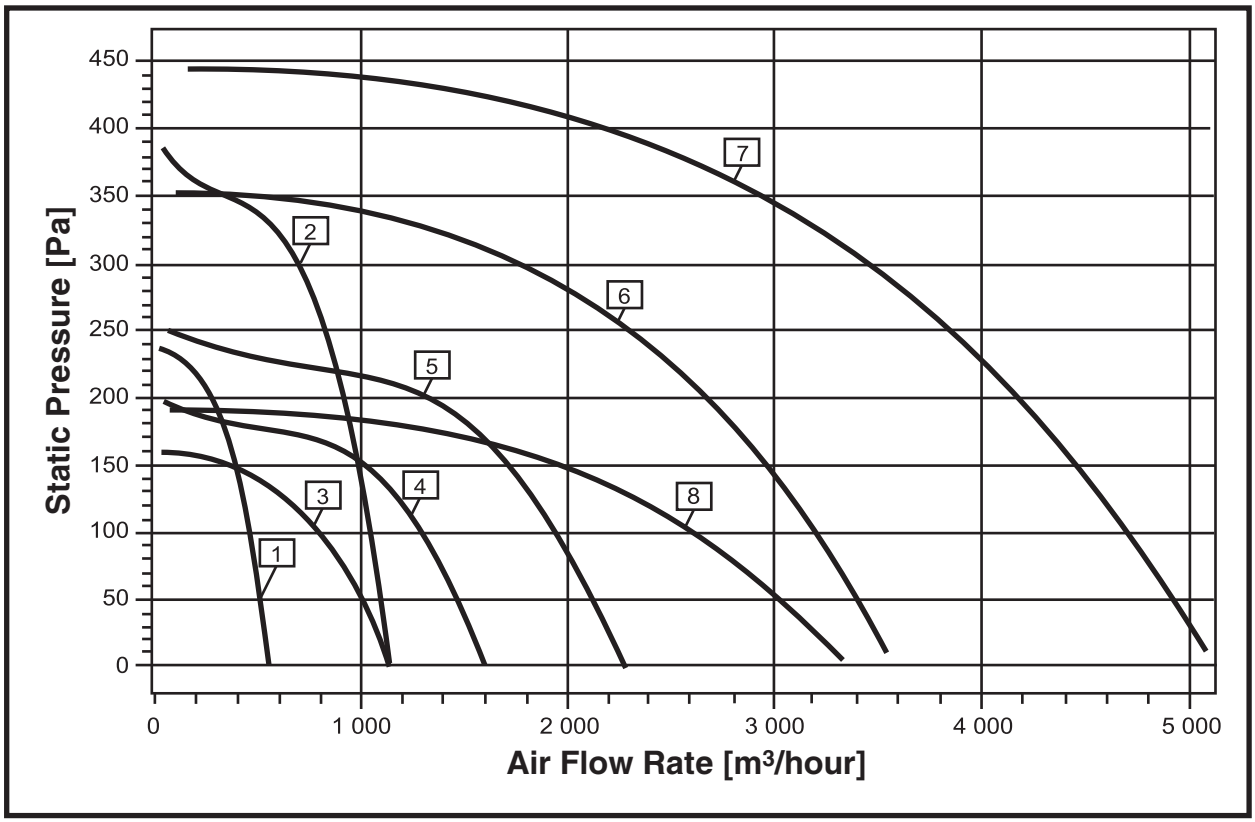

No.	Fan Model	Electric Motor			Adjusted Sound Power Level L_{pA} [dB(A)]		Fan weight [kg]
		Type	Rotation Speed [rpm]	Power [kW]	At the Inlet	At the Outlet	
1	ВРКШ-1,6-2-3 ВРКШ-1,6-2-1	АИС56А2/ АИСЕ56А2	2900	0.09	64	57	21
2	ВРКШ-2-2-3 ВРКШ-2-2-1	АИР56В2/ АИРЕ56С2	2900	0.25	71	63	27
3	ВРКШ-2,5-4-3 ВРКШ-2,5-4-1	АИС56В4/ АИСЕ56В4	1450	0.09	62	55	30
4	ВРКШ-2,8-4-3 ВРКШ-2,8-4-1	АИР56В4/ АИРЕ56В4	1450	0.18	66	58	36
5	ВРКШ-3,15-4-3 ВРКШ-3,15-4-1	АИР63А4/ АИРЕ63В4	1450	0.25	70	62	49
6	ВРКШ-3,55-4-3 ВРКШ-3,55-4-1	АИР71А4/ АИРЕ71В4	1450	0.55	73	66	59
7	ВРКШ-4-4-3	АИР71В4	1450	0.75	77	69	69
8	ВРКШ-4-6-3	АИР63В6	950	0.25	68	61	55

CHARACTERISTICS SUMMARY DIAGRAM

1000 – 18000 m³/hour

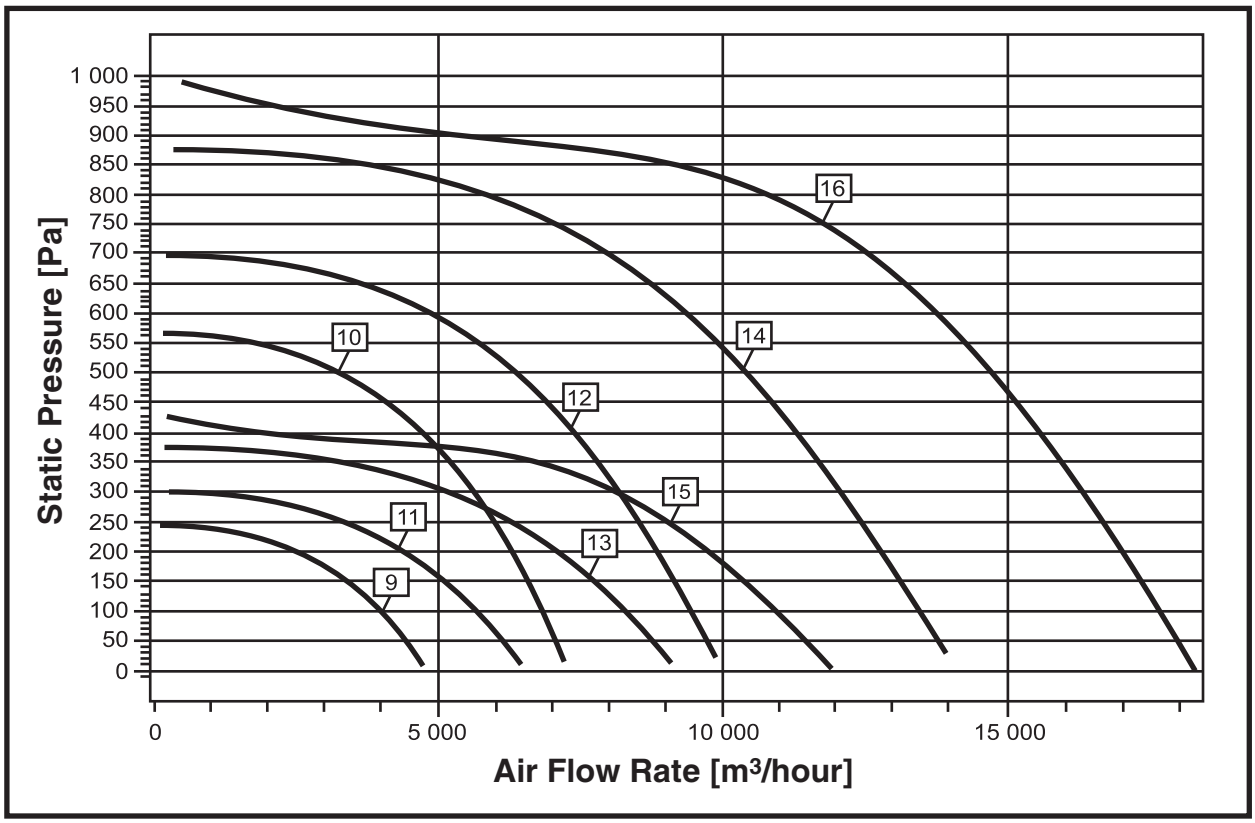

No.	Fan Model	Electric Motor			Adjusted Sound Power Level L_{pA} [dB(A)]		Fan weight [kg]
		Type	Rotation Speed [rpm]	Power [kW]	At the Inlet	At the Outlet	
9	ВРКШ-4,5-6-3	АИР71В6	950	0.55	71	64	66
10	ВРКШ-4,5-4-3	АИР80В4	1450	1.5	80	73	80
11	ВРКШ-5-6-3	АИР80А6	950	0.75	75	67	92
12	ВРКШ-5-4-3	АИР90L4	1450	2.2	84	76	114
13	ВРКШ-5,6-6-3	АИР80В6	950	1.1	78	71	130
14	ВРКШ-5,6-4-3	АИР100L4	1450	4	87	80	179
15	ВРКШ-6,3-6-3	АИР100L6	950	2.2	82	74	172
16	ВРКШ-6,3-4-3	АИР132S4	1450	7.5	91	83	226

Manufactured in accordance with TU 4861-014-64600223-13

3500 – 48000 m³/hour

Noiseless fans are used for removal of air and other gas mixtures from building in temperate (У), tropical (Т, ТВ, ТС), or cold (ХЛ, УХЛ) climate conditions of the 1st category of location according to GOST 15150.

Noise performance is defined according to GOST 31353.3-2007 and represented by values of corrected sound power level L_{pA} in dBA. To define sound pressure level L on a certain distance from fan see p.56.

Automatic Control System see p.182.

Fans are denoted as follows:

ВОКШ – 5 – В – 00 – У1

- У1 – Climatic version;
- 00 – Fan design number;
- В – Design variant:
  - without alphabetic notation – general purpose;
  - В – explosion-proof;
- 5 – Impeller diameter in decimeters;
- Ш – Index Ш is used for noiseless design;
- ВОКШ – Fan type (Axial roof fan).

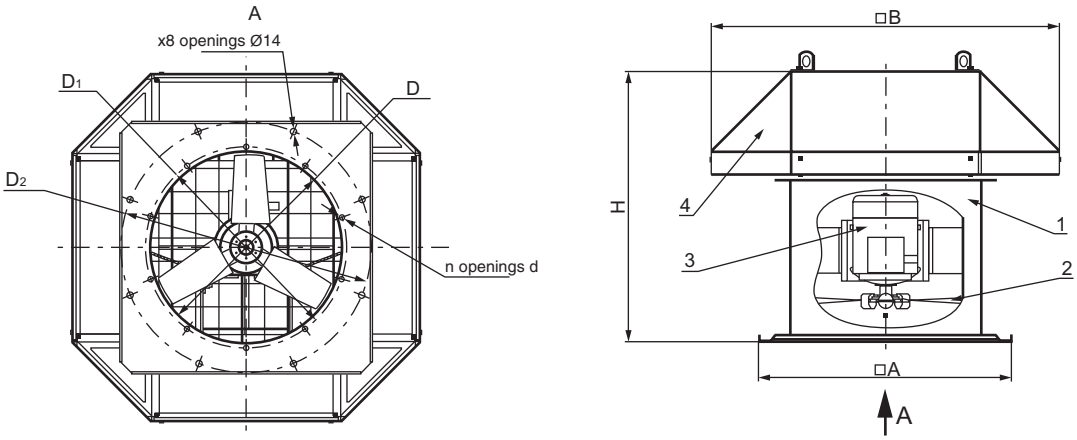

1 – Fan casing; 2 – Impeller; 3 – Electric motor; 4 – Noise hood.

Fig.1: Overall and connection dimensions of VOKSh series fans.

Fan Model	Dimensions [mm]							n
	A	B	H	D	D_1	D_2	d	
ВОКШ-5-00	670	925	696	504	530	665	8	10
ВОКШ-5-01	670	925	696	504	530	665	8	10
ВОКШ-5-02	670	925	696	504	530	665	8	10
ВОКШ-5-03	670	925	696	504	530	665	8	10
ВОКШ-5-04	670	925	696	504	530	665	8	10
ВОКШ-8-00	1040	1200	940	810	850	1072	10	12
ВОКШ-8-01	1040	1200	940	810	850	1072	10	12
ВОКШ-8-02	1040	1200	940	810	850	1072	10	12
ВОКШ-8-03	1040	1200	940	810	850	1072	10	12
ВОКШ-10-00	1280	1620	840	1010	1040	1272	10	16
ВОКШ-10-01	1280	1620	840	1010	1040	1272	10	16
ВОКШ-10-02	1280	1620	960	1010	1040	1272	10	16
ВОКШ-10-03	1280	1620	960	1010	1040	1272	10	16
ВОКШ-10-04	1280	1620	960	1010	1040	1272	10	16
ВОКШ-10-05	1280	1620	960	1010	1040	1272	10	16

CHARACTERISTICS SUMMARY DIAGRAM

3500 – 16000 m³/hour

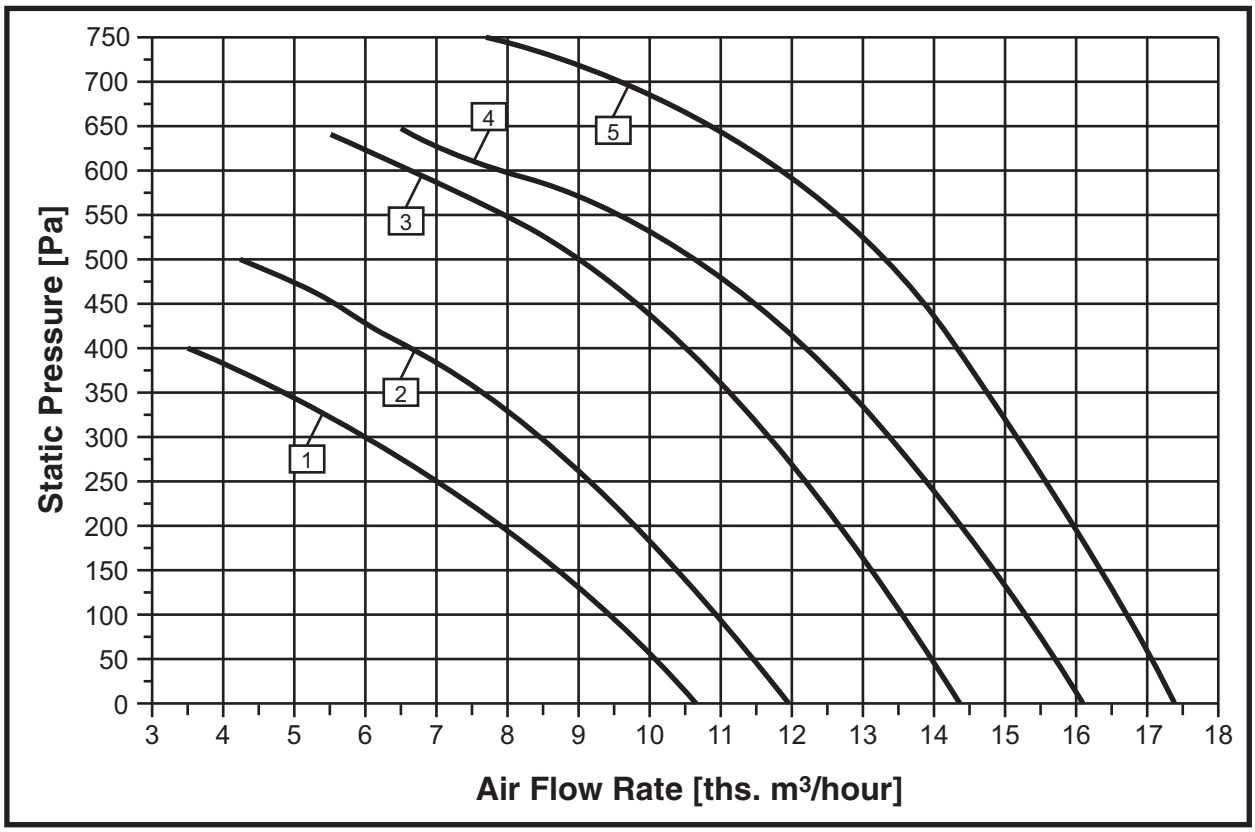

No.	Fan Model	Motor			Corrected sound power level L_{pA} [dBA]		Fan Weight [kg]
		Type	Rotation speed [rpm]	Power [kW]	Inlet	Outlet	
1	ВОКШ-5-00	АИР71В2	2900	1,1	87	80	42,5
2	ВОКШ-5-01	АИР80А2	2900	1,5	90	82	45
3	ВОКШ-5-02	АИР80В2	2900	2,2	89	82	47
4	ВОКШ-5-03	АИР90L2	2900	3	87	79	49
5	ВОКШ-5-04	АИР100S2	2900	4,0	92	86	53

CHARACTERISTICS SUMMARY DIAGRAM

5500 – 48000 m³/hour

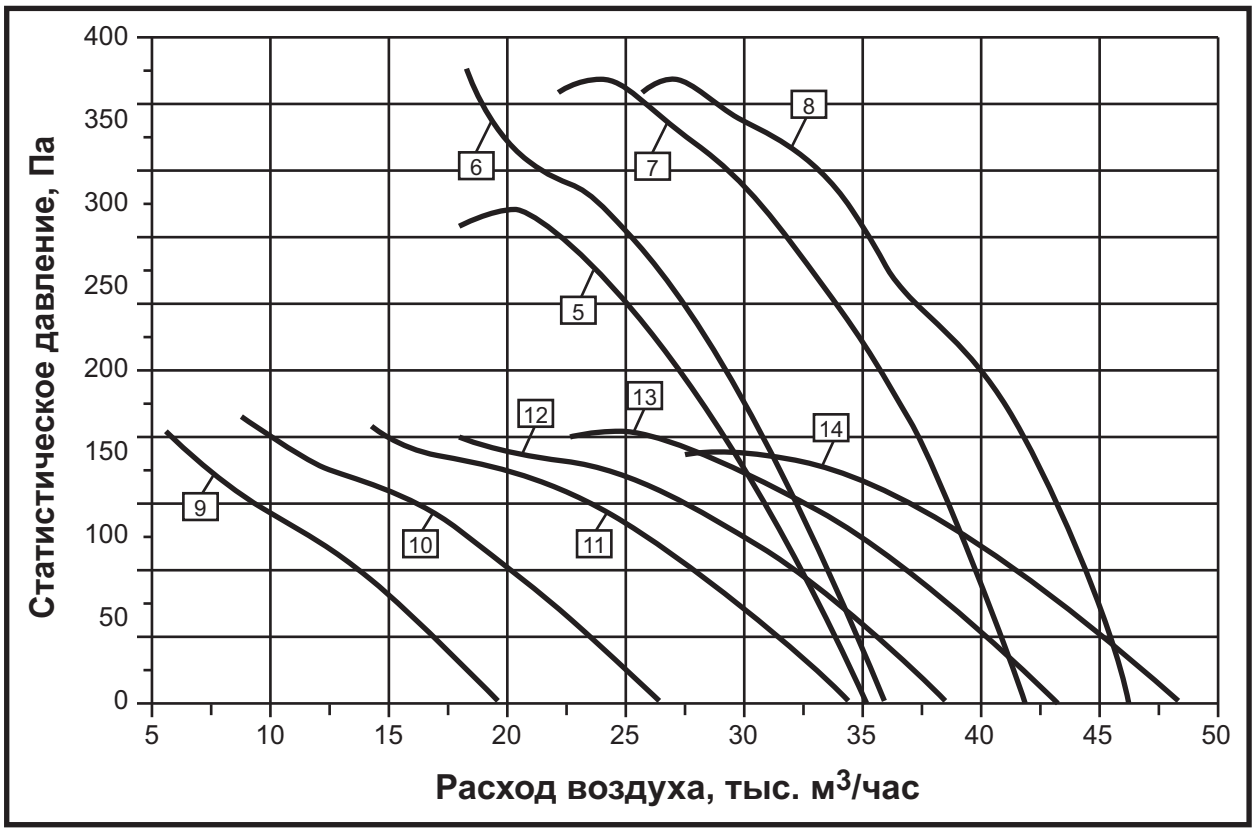

No.	Fan Model	Motor			Corrected sound power level L_{pA} [dBA]		Fan Weight [kg]
		Type	Rotation speed [rpm]	Power [kW]	Inlet	Outlet	
5	ВОКШ-8-00	АИР100L4	1450	4	87	80	120
6	ВОКШ-8-01	АИР112M4	1450	5,5	89	84	128
7	ВОКШ-8-02	АИР132S4	1450	7,5	91	84	137
8	ВОКШ-8-03	АИР132M4	1450	11	93	86	145
9	ВОКШ-10-00	АИР80A6	950	0,75	85	78	105
10	ВОКШ-10-01	АИР80B6	950	1,1	84	77	107
11	ВОКШ-10-02	АИР100L6	950	2,2	83	76	137
12	ВОКШ-10-03	АИР100L6	950	2,2	83	76	137
13	ВОКШ-10-04	АИР112A6	950	3	84	77	144
14	ВОКШ-10-05	АИР112B6	950	4	85	78	153

Noise Performance

Noise characteristics are defined in accordance with GOST 31353.3-2007 and represented by the dBA values of corrected sound-power levels L_{pA} on delivery side and suction side in motor maximum efficiency mode. Sound power levels are 2-3dBA higher on the mode close to the fan maximum performance.

Sound-power level L_{pi} in octave bands with geometric mean frequencies, when rotation speed is constant, is defined as follows: $L_{pi.}=L_{pA} + \Delta L_{pi.}$

$\Delta L_{pi.}$ values are specified in the following table:

Octave bandwidth [Hz]	63	125	250	500	1000	2000	4000	8000
ΔL_{pi} [dB] (at the inlet)	-11	-6	0	-1	-9	-10	-10,5	-18
ΔL_{pi} [dB] (at the outlet)	-3	2	-2	-5	-3	-10,5	-15,5	-19

Sound pressure level L at certain distance from fan may be calculated using the following equation (SNiP 23-03-2003 Noise protection):

$$L = L_{pA} – 8 – 20\lg(r) = L_{pA} – dL,$$

where: r – distance from fan [m];
dL – correction value [dBA].

dL correction value versus distance from fan curve is presented on the figure below:

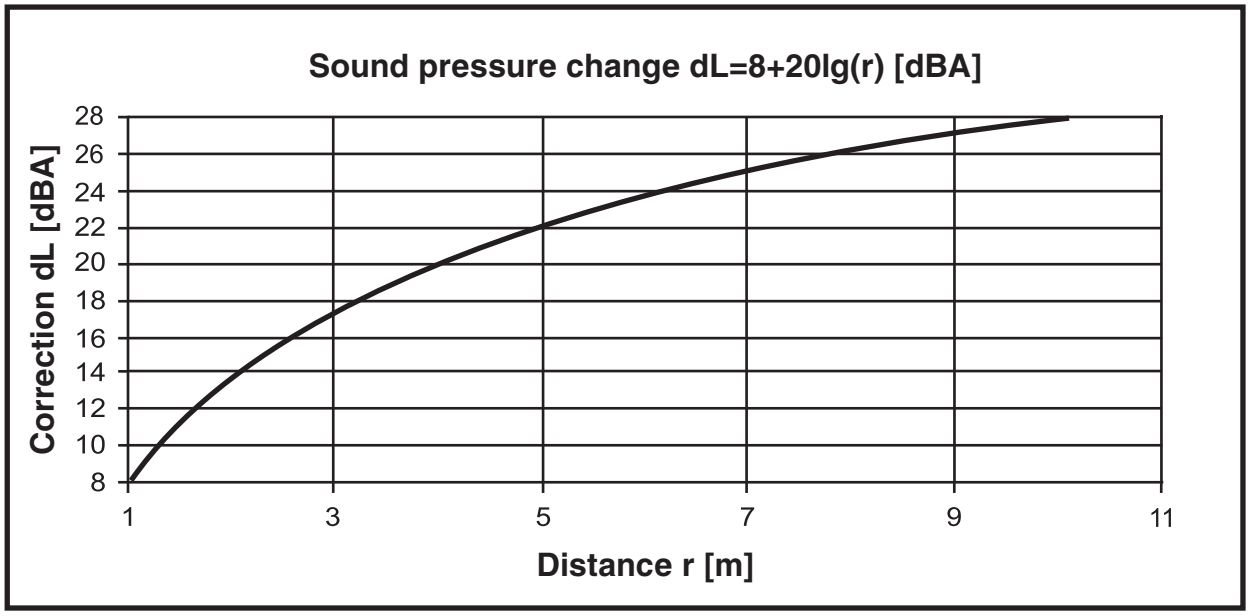

Manufactured in accordance with TU 4861-028-64600223-13

2000 – 56000 m³/hour

BO 12–300 fans are used in HVAC systems of industrial, public, and residential buildings, as well as in other sanitary-engineering or production applications.

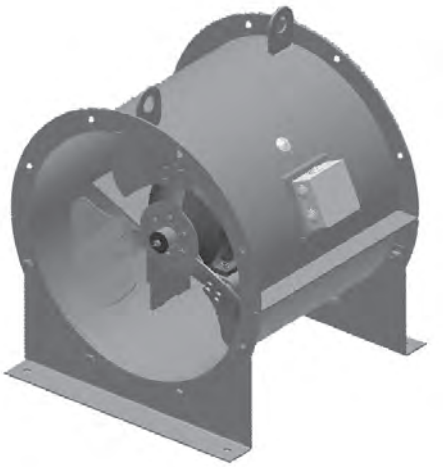

Automatic Control System see p.182.

Fans are denoted as follows:

BO – 12 – 300 – 4 – B – 00 – У2

- Climatic version;
- Fan design number;
- Design variant: without alphabetic notation – general purpose;
- Impeller diameter in decimeters;
- Aerodynamic configuration index;
- Fan type (Axial fan).

Fans are used for operation in temperate (У), tropical (Т), or boreal (УХЛ) climate conditions of 2nd category of location according to GOST 15150. 1st category of location is allowed to provide fan protection against direct sunlight and weather (see pp.169-170).

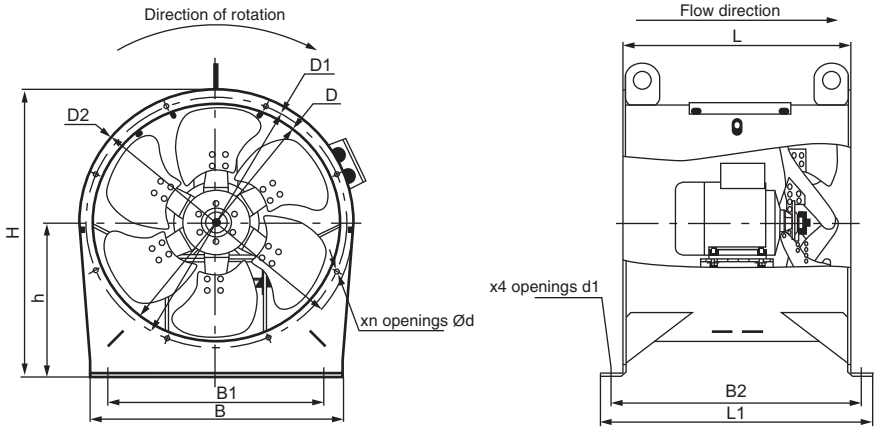

Fig. 1: Overall and connection dimensions of BO-12-300 (VO-12-300) fans

Overall and connection dimensions of general purpose industrial grade fans BO-12-300 (VO-12-300)

Fan Type	Dimensions [mm]													Weight [kg]
	D	D_1	D_2	d	d_1	B	B_1	B_2	L	L_1	H	h	n	
BO-12-300-4-00	406	430	460	8	12	420	360	416	380	452	495	265	8	21,9
BO-12-300-4-01	406	430	460	8	12	420	360	416	380	452	495	265	8	24,0
BO-12-300-4-02	406	430	460	8	12	420	360	416	380	452	495	265	8	24,8
BO-12-300-4-03	406	430	460	8	12	420	360	416	380	452	495	265	8	27,2
BO-12-300-5-00	506	530	560	8	12	520	460	442	406	478	600	320	10	30,2
BO-12-300-5-01	506	530	560	8	12	520	460	442	406	478	600	320	10	35,5
BO-12-300-6,3-00	640	680	710	10	18	630	570	562	500	612	730	375	12	51,2
BO-12-300-6,3-01	640	680	710	10	18	630	570	562	500	612	730	375	12	60,9
BO-12-300-6,3-02	640	680	710	10	18	630	570	562	500	612	730	375	12	56,9
BO-12-300-6,3-03	640	680	710	10	18	630	570	562	500	612	730	375	12	63,9
BO-12-300-8-00	810	850	900	10	18	800	760	320	500	410	975	525	12	77,0
BO-12-300-8-01	810	850	900	10	18	800	760	320	500	410	975	525	12	85,6
BO-12-300-8-02	810	850	900	10	18	800	760	320	500	410	975	525	12	84,0
BO-12-300-10-00	1020	1055	1100	10	18	940	900	410	590	500	1175	625	16	121,5
BO-12-300-12,5-00	1270	1310	1350	12	18	1170	1110	550	716	616	1430	755	18	210,0
BO-12-300-12,5-01	1270	1310	1350	12	18	1170	1110	550	716	616	1430	755	18	213,0
BO-12-300-12,5-02	1270	1310	1350	12	18	1170	1110	550	716	616	1430	755	18	218,0

CHARACTERISTICS SUMMARY DIAGRAM

2000 – 6300 m³/hour

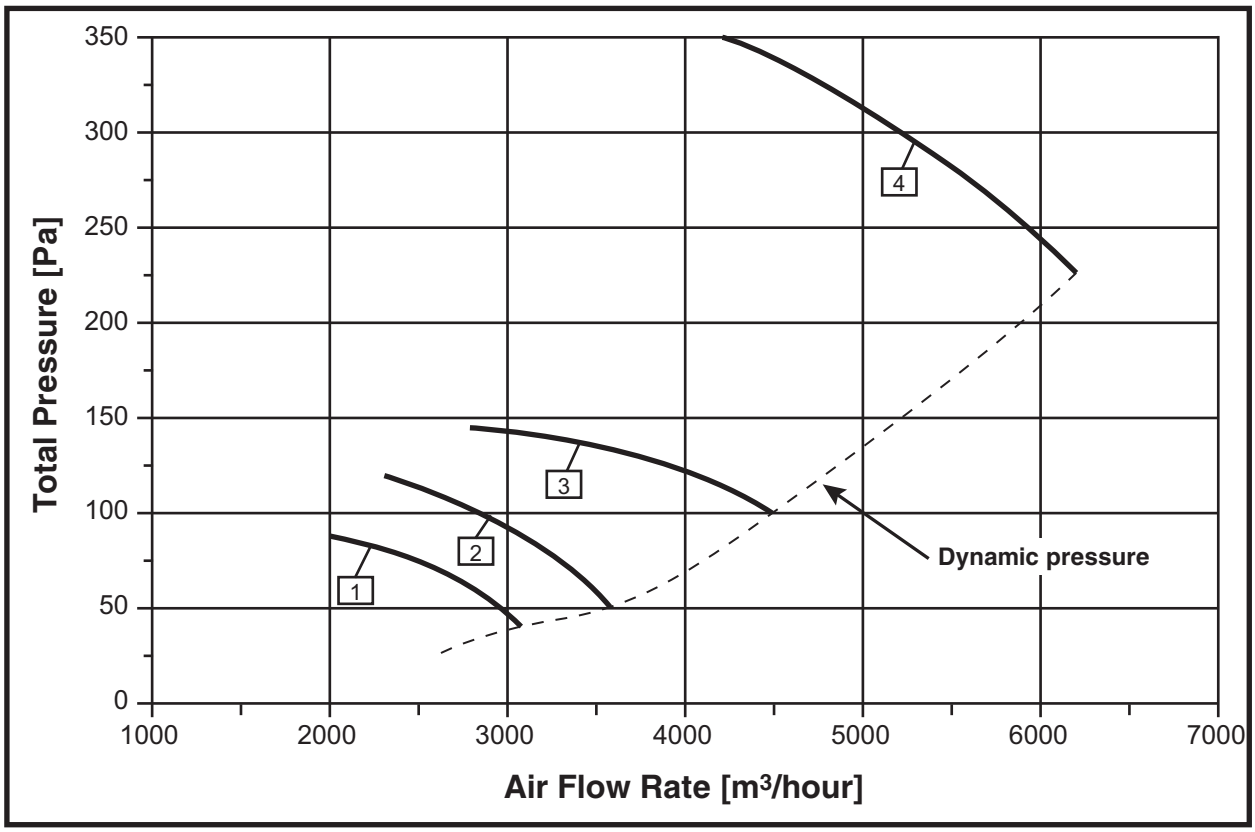

No.	Fan Type	Motor			Working area parameters	
		Type	Rotation speed [rpm]	Installed power [kW]	Capacity [ths. m³/hour]	Total Pressure [Pa]
1	BO-12-300-4-00	АИР56А4	1450	0,12	2,0 – 3,1	87 – 40
2	BO-12-300-4-01	АИР56В4	1450	0,18	2,5 – 3,6	120 – 50
3	BO-12-300-4-02	АИР63А4	1450	0,25	3,4 – 4,5	145 – 100
4	BO-12-300-4-03	АИР71А2	2900	0,75	4,2 – 6,3	350 – 175

CHARACTERISTICS SUMMARY DIAGRAM

4800 – 7700 m³/hour

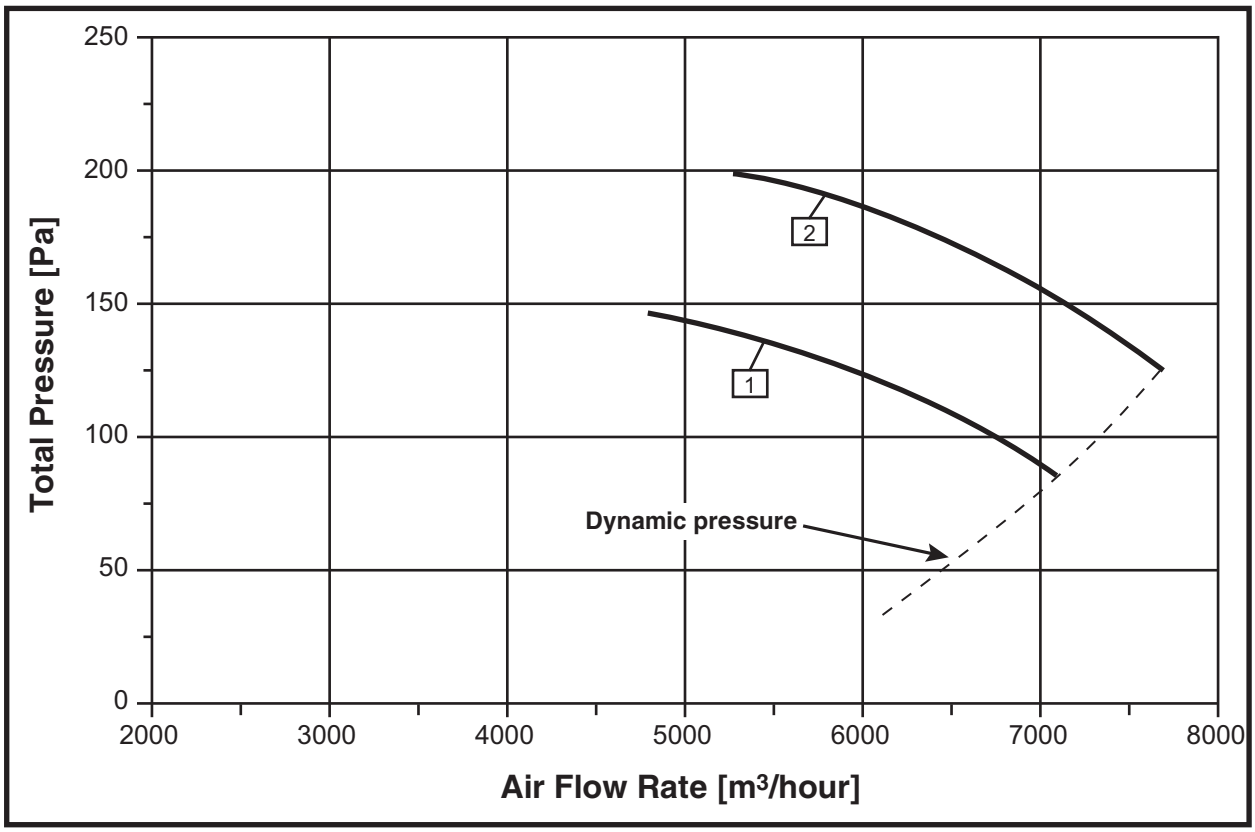

No.	Fan Type	Motor			Working area parameters	
		Type	Rotation speed [rpm]	Installed power [kW]	Capacity [ths. m³/hour]	Total Pressure [Pa]
1	BO-12-300-5-00	АИР63В4	1450	0,37	4,8 – 7,1	145 – 85
2	BO-12-300-5-01	АИР71А4	1450	0,55	5,2 – 7,7	200 – 125

CHARACTERISTICS SUMMARY DIAGRAM

6200 – 16000 m³/hour

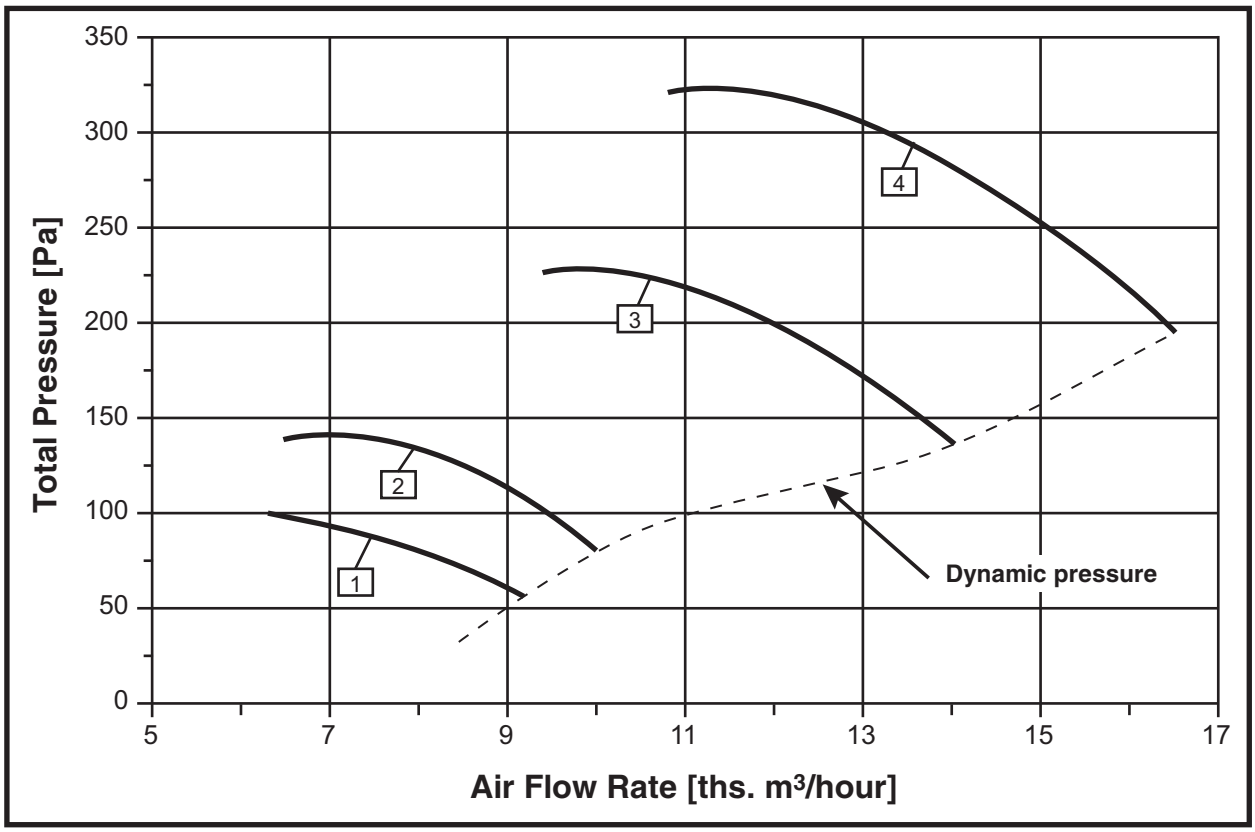

No.	Fan Type	Motor			Working area parameters	
		Type	Rotation speed [rpm]	Installed power [kW]	Capacity [ths. m³/hour]	Total Pressure [Pa]
1	BO-12-300-6,3-00	АИР71А6	950	0,37	6,2 – 9,2	100 – 56
2	BO-12-300-6,3-01	АИР80А6	950	0,75	6,5 – 10,0	140 – 80
3	BO-12-300-6,3-02	АИР80А4	1450	1,1	9,4 – 14,0	225 – 135
4	BO-12-300-6,3-03	АИР90L4	1450	2,2	10,8 – 16,0	320 – 190

CHARACTERISTICS SUMMARY DIAGRAM

9500 – 46000 m³/hour

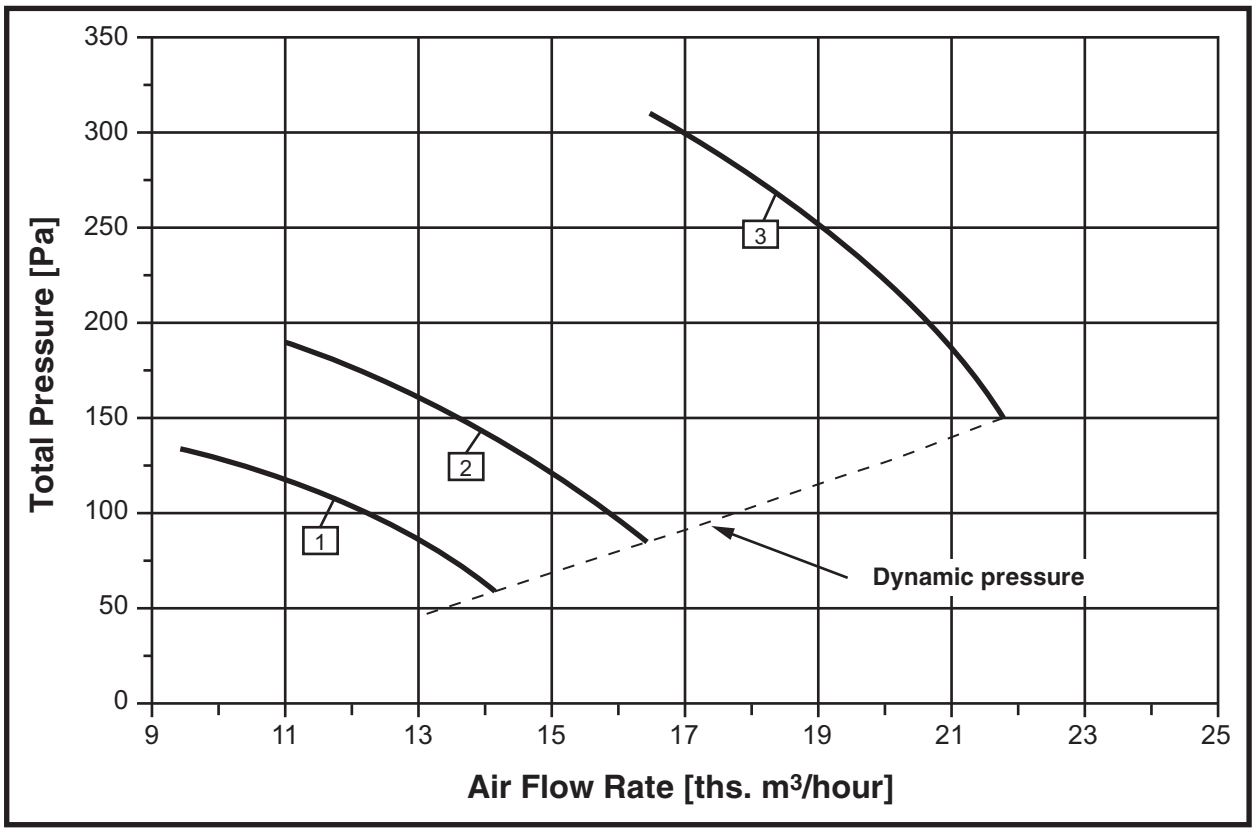

No.	Fan Type	Motor			Working area parameters	
		Type	Rotation speed [rpm]	Installed power [kW]	Capacity [ths. m³/hour]	Total Pressure [Pa]
1	BO-12-300-8-00	АИР80А6	950	0,75	9,5 – 14,2	135 – 60
2	BO-12-300-8-01	АИР80В6	950	1,1	11,0 – 16,5	190 – 85
3	BO-12-300-8-02	АИР100S4	1450	3,0	16,5 – 46,0	310 – 150

CHARACTERISTICS SUMMARY DIAGRAM

21400 – 56000 m³/hour

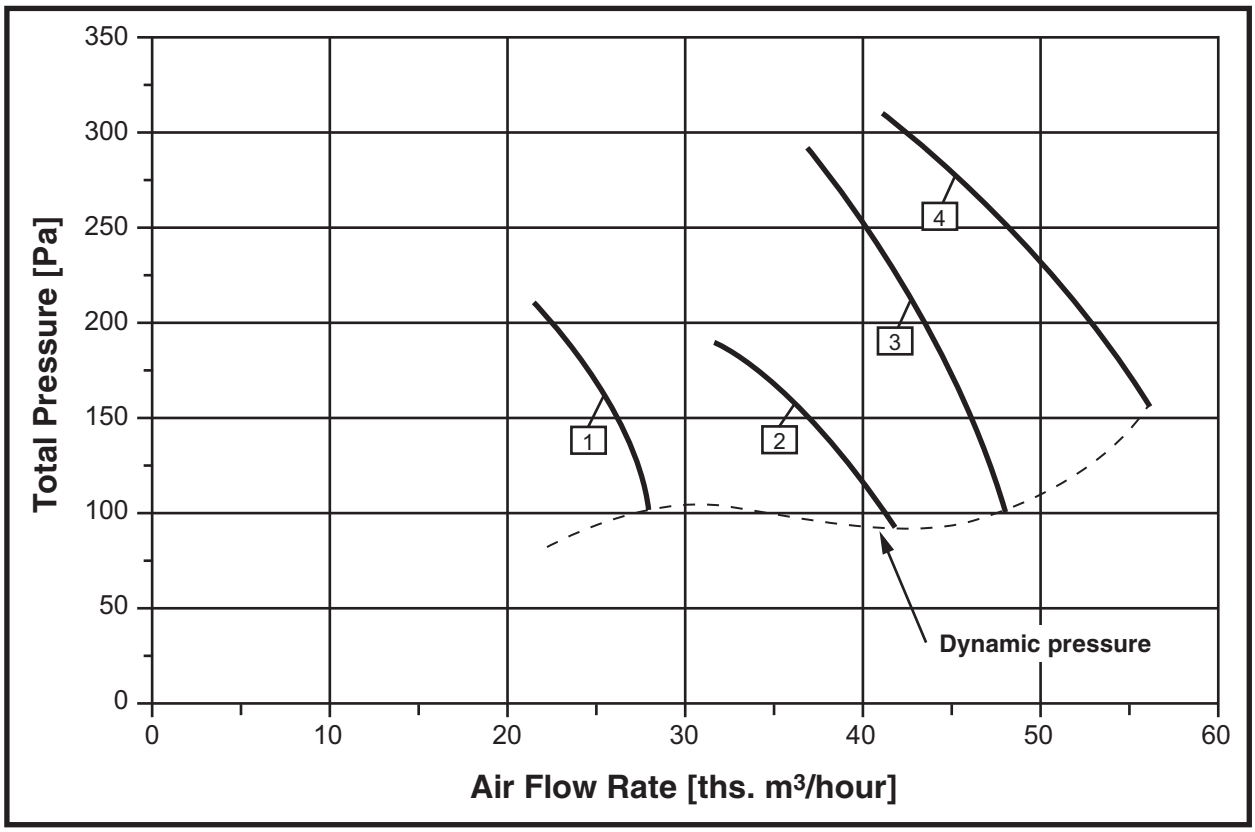

No.	Fan Type	Motor			Working area parameters	
		Type	Rotation speed [rpm]	Installed power [kW]	Capacity [ths. m³/hour]	Total Pressure [Pa]
1	BO-12-300-10-00	АИР100L6	950	2,2	21,4 – 28,0	210 – 100
2	BO12-300-12,5-00	АИР112MB8	730	3,0	31,6 – 42,0	190 – 90
3	BO-12-300-12,5-01	АИР132M8	730	5,5	34,8 – 46,5	260 – 120
4	BO-12-300-12,5-02	АИР132M6	950	7,5	39,0 – 56,0	320 – 160

Manufactured in accordance with TU 4861-029-64600223-13

15000 – 89000 m³/hour

BO 25–188 fans are used in HVAC systems of industrial, public, and residential buildings, as well as in other sanitary-engineering or production applications.

Automatic Control System see p.182.

Fans are denoted as follows:

BO – 25 – 188 – 8 – B – 00 – У2

- Climatic version;
- Fan design number;
- Design variant:
  without alphabetic notation – general purpose;
  B – explosion-proof;
- Impeller diameter in decimeters;
- Aerodynamic configuration index;
- Fan type (Axial fan).

Fans are used for operation in temperate (У), tropical (Т), or boreal (УХЛ) climate conditions of 2nd category of location according to GOST 15150. 1st category of location is allowed to provide fan protection against direct sunlight and weather (see pp.169-170).

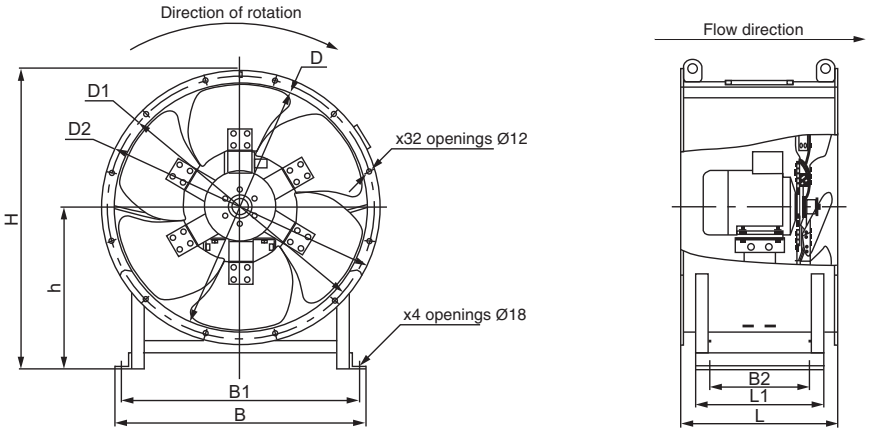

Fig. 1: Overall and connection dimensions of BO-25-188 (VO-25-188) fans

Fan Type	Dimensions [mm]										Weight [kg]
	D	D_1	D_2	B	B_1	B_2	L	L_1	H	h	
BO-25-188-8-00	810	860	900	800	760	350	530	440	1005	555	105.2
BO-25-188-8-01	810	860	900	800	760	420	600	510	1005	555	119,3
BO-25-188-8-02	810	860	900	800	760	540	720	630	1005	555	140
BO-25-188-8-03	810	860	1110	800	760	540	720	630	1005	555	146
BO-25-188-10-00	1020	1070	1110	940	900	530	710	620	1285	730	177
BO-25-188-10-01	1020	1070	1110	940	900	670	850	760	1285	730	258
BO-25-188-10-02	1020	1070	1110	940	900	670	850	760	1285	730	274,6
BO-25-188-12,5-00	1260	1320	1360	1170	1110	680	860	770	1590	910	312
BO-25-188-12,5-01	1260	1320	1360	1170	1110	680	860	770	1590	910	342
BO-25-188-12,5-02	1260	1320	1360	1170	1110	810	990	900	1590	910	367

CHARACTERISTICS SUMMARY DIAGRAM

15000 – 40000 m³/hour

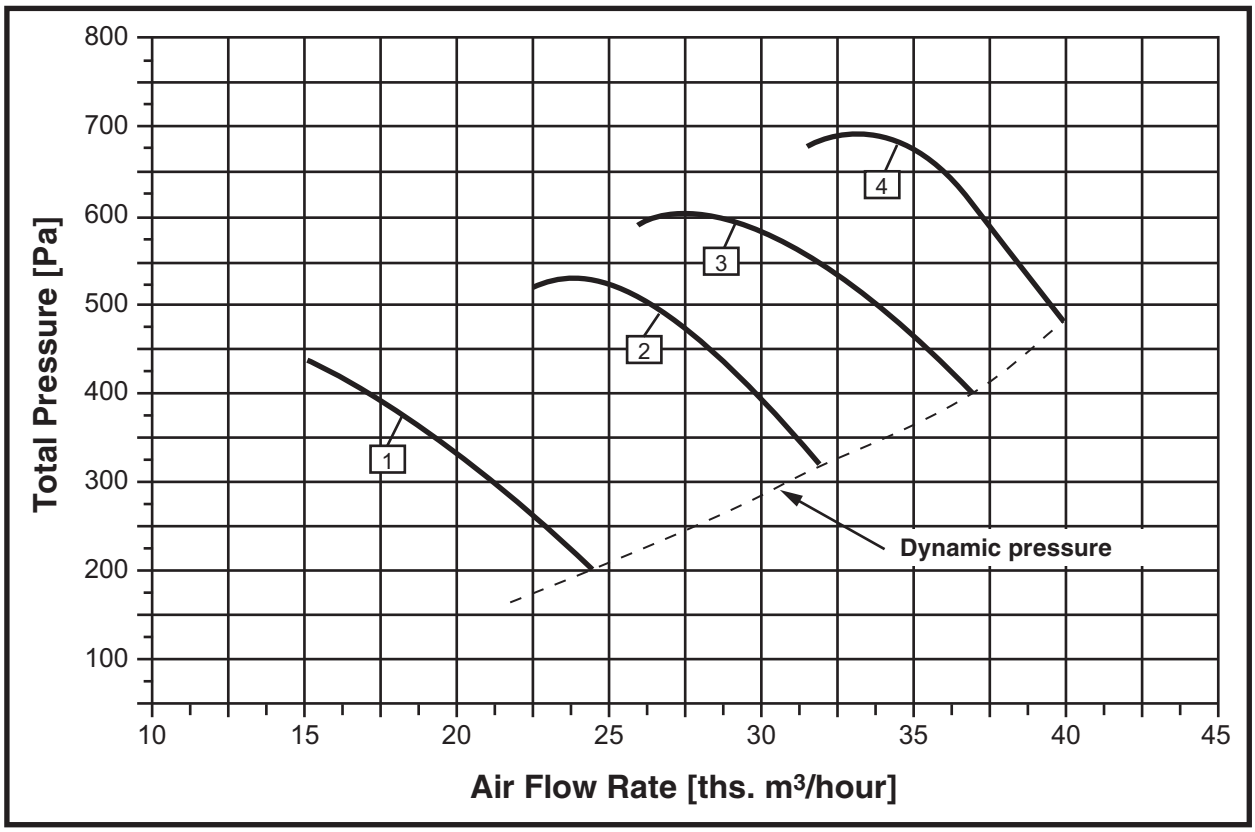

No.	Fan Type	Motor			Working area parameters	
		Type	Rotation speed [rpm]	Installed power [kW]	Capacity [ths. m³/hour]	Total Pressure [Pa]
1	BO-25-188-8-00	АИР100L4	1450	4,0	15,0 – 24,5	440 – 200
2	BO-25-188-8-01	АИР112M4	1450	5,5	22,5 – 32,0	520 – 320
3	BO-25-188-8-02	АИР132S4	1450	7,5	26,0 – 37,0	590 – 400
4	BO-25-188-8-03	АИР132M4	1450	11,0	31,5 – 40,0	680 – 480

CHARACTERISTICS SUMMARY DIAGRAM

24000 – 61500 m³/hour

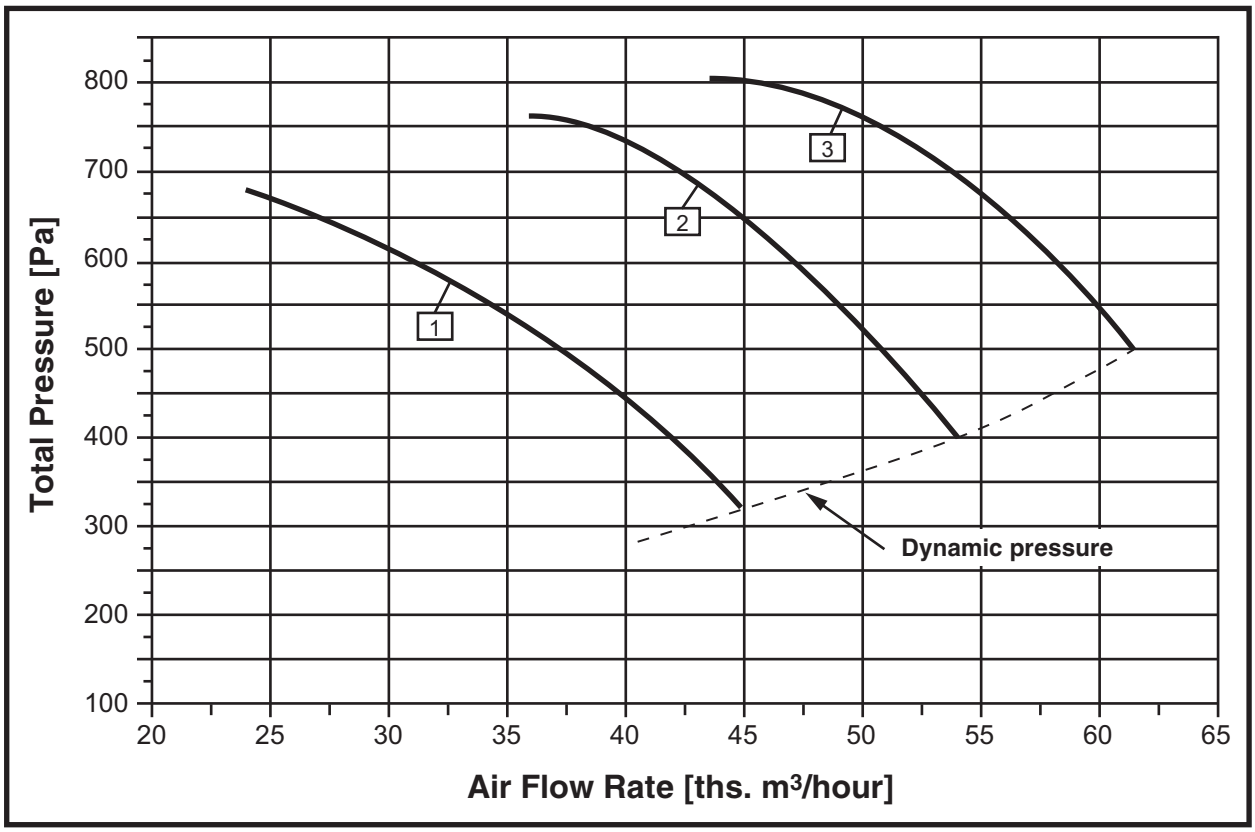

No.	Fan Type	Motor			Working area parameters	
		Type	Rotation speed [rpm]	Installed power [kW]	Capacity [ths. m³/hour]	Total Pressure [Pa]
1	BO-25-188-10-00	АИР132М4	1450	11,0	24,0 – 45,0	680 – 320
2	BO-25-188-10-01	АИР160S4	1450	15,0	36,0 – 54,0	760 – 400
3	BO-25-188-10-02	АИР160М4	1450	18,5	43,0 – 61,5	800 – 500

CHARACTERISTICS SUMMARY DIAGRAM

37400 – 89000 m³/hour

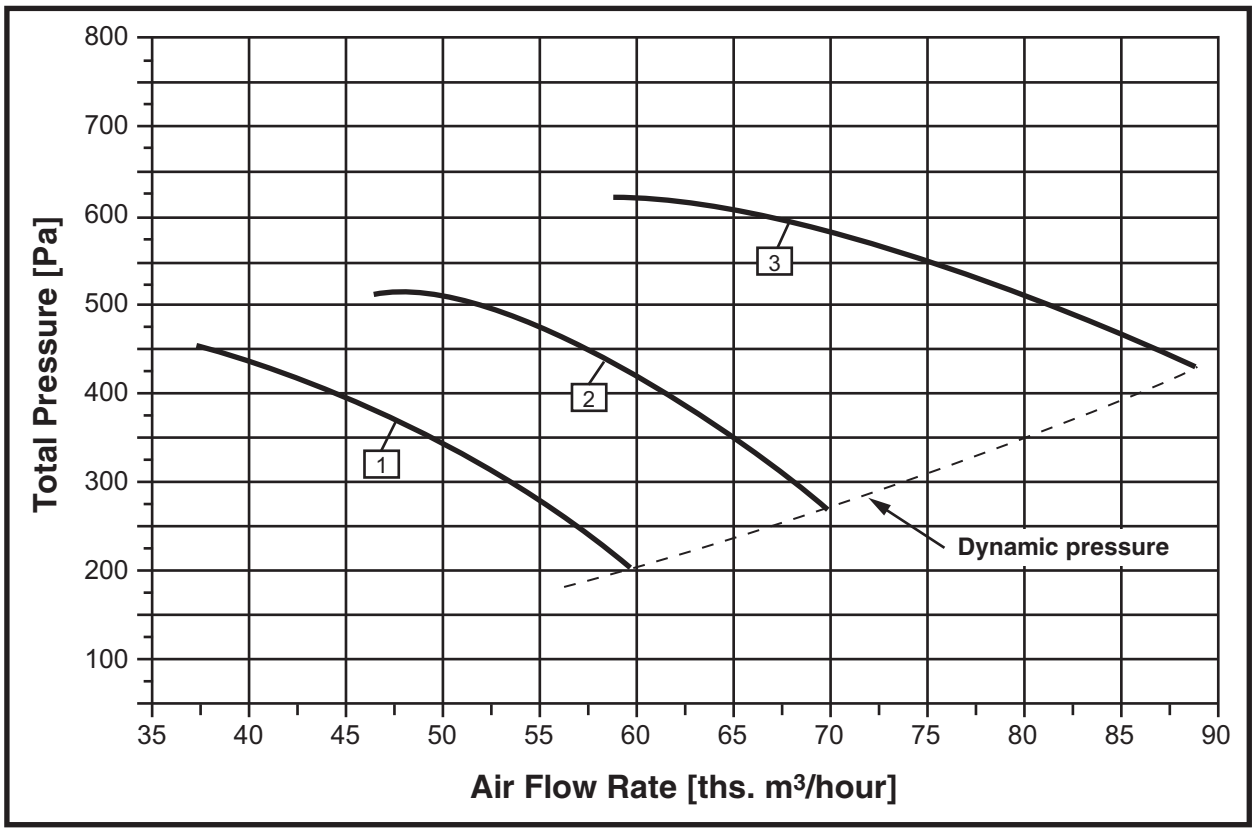

No.	Fan Type	Motor			Working area parameters	
		Type	Rotation speed [rpm]	Installed power [kW]	Capacity [ths. m³/hour]	Total Pressure [Pa]
1	BO-25-188-12,5-00	АИР160S6	950	11,0	37,4 – 60,0	455 – 205
2	BO-25-188-12,5-01	АИР160M6	950	15,0	46,5 – 70,0	510 – 270
3	BO-25-188-12,5-02	АИР180M6	950	18,5	58,8 – 89,0	620 – 430

Manufactured in accordance with TU 4861-030-64600223-13

5000 – 88500 m³/hour

Smoke ventilation fans are mounted in general ventilation systems. There are four standard sizes of a fan: 063; 080; 100; 125. These fans are distinguished by the capability to install impeller blades at different angles. As a result, fan with fixed diameter of impeller provides selection of operation modes.

Automatic Control System see p.182.

Fans are denoted as follows:

BO – 30 – 160 – 6,3 – B – 00 – У2

- Climatic version;
- Fan design number;
- Design variant:
  without alphabetic notation – general purpose;
  B – explosion-proof;
- Impeller diameter in decimeters;
- Aerodynamic configuration index;
- Fan type (Axial fan).

Fans are used for operation in temperate (У), tropical (Т), or boreal (УХЛ) climate conditions of 2nd category of location according to GOST 15150. 1st category of location is allowed to provide fan protection against direct sunlight and weather (see pp.169-170).

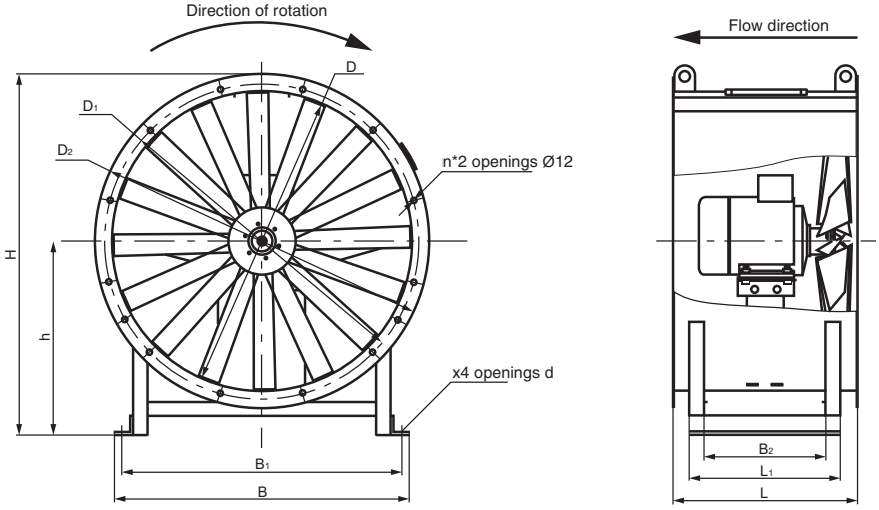

Fig. 1: Overall and connection dimensions of BO-30-160 (VO-30-160) fans

Fan Type	Dimensions [mm]											n	Weight [kg]
	D	D_1	D_2	d	B	B_1	B_2	L	L_1	H	h		
BO-30-160-6,3-00	640	690	730	14	600	440	540	710	590	865	500	12	97
BO-30-160-6,3-01	640	690	730	14	600	440	540	710	590	865	500	12	107
BO-30-160-6,3-02	640	690	730	14	600	440	540	710	590	865	500	12	100
BO-30-160-6,3-03	640	690	730	14	600	440	540	710	590	865	500	12	117
BO-30-160-8-00	810	860	900	18	760	610	730	930	780	1005	555	16	224
BO-30-160-8-01	810	860	900	18	760	610	730	930	780	1005	555	16	214
BO-30-160-8-02	810	860	900	18	760	610	730	930	780	1005	555	16	247
BO-30-160-8-03	810	860	900	18	760	610	730	930	780	1005	555	16	242
BO-30-160-10-00	1020	1070	1110	18	930	730	930	1115	980	1285	730	16	236
BO-30-160-10-01	1020	1070	1110	18	930	730	930	1115	980	1285	730	16	242
BO-30-160-10-02	1020	1070	1110	18	930	730	930	1115	980	1285	730	16	247
BO-30-160-10-03	1020	1070	1110	18	930	730	930	1115	980	1285	730	16	311
BO-30-160-10-04	1020	1070	1110	18	930	730	930	1115	980	1285	730	16	246
BO-30-160-10-05	1020	1070	1100	18	930	730	930	1115	980	1285	730	16	327
BO-30-160-10-06	1020	1070	1110	18	930	730	930	1115	980	1285	730	16	376
BO-30-160-12,5-00	1270	1320	1350	18	990	790	1130	1330	1200	1585	910	16	319
BO-30-160-12,5-01	1270	1320	1350	18	990	790	1130	1330	1200	1585	910	16	419
BO-30-160-12,5-02	1270	1320	1350	18	990	790	1130	1330	1200	1585	910	16	488
BO-30-160-12,5-03	1270	1320	1350	18	990	790	1130	1330	1200	1585	910	16	655

Note:
1) Weight is specified for reference only

CHARACTERISTICS SUMMARY DIAGRAM

5000 – 16200 m³/hour

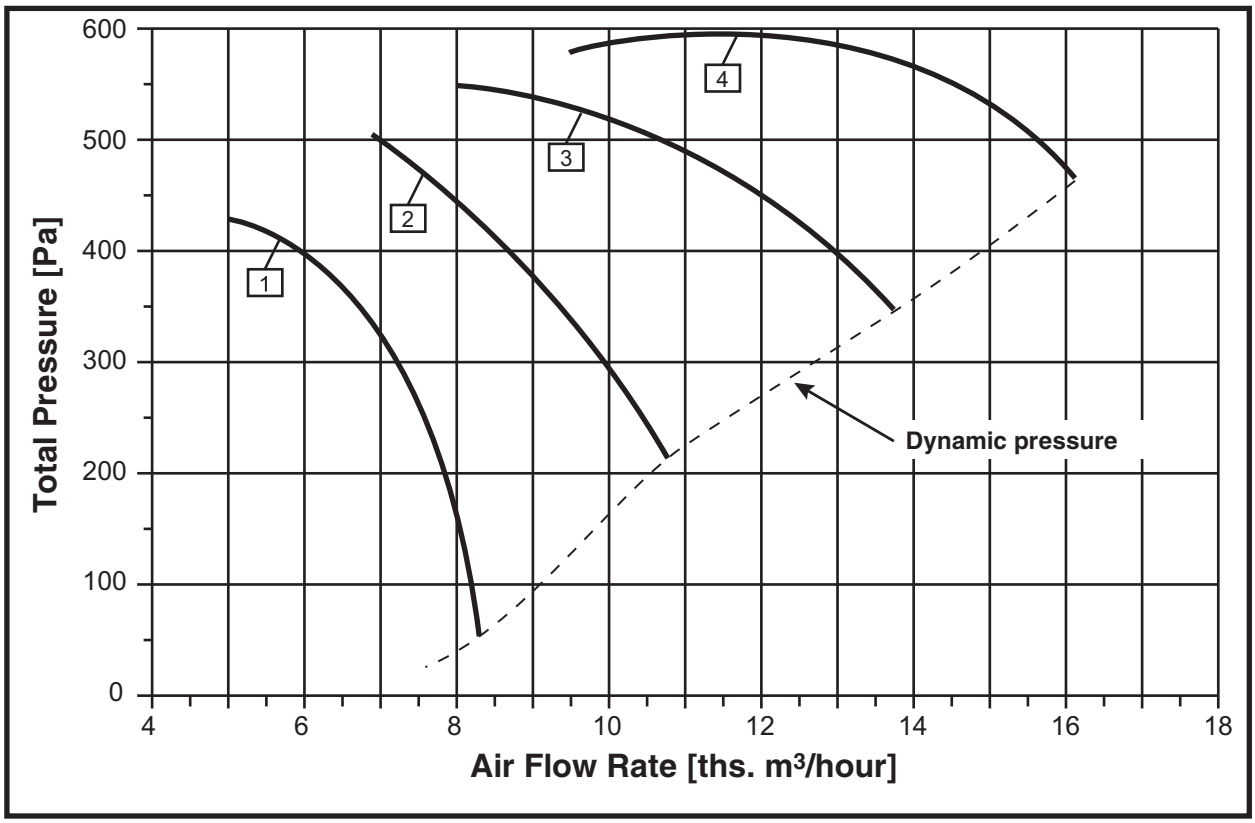

No.	Fan Type	Motor			Working area parameters	
		Type	Rotation speed [rpm]	Installed power [kW]	Capacity [ths. m³/hour]	Total Pressure [Pa]
1	BO-30-160-6,3-00	АИР80А4	1450	1,1	5,0 – 8,3	430 – 54
2	BO-30-160-6,3-01	АИР90L4	1450	2,2	6,9 – 10,8	505 – 215
3	BO-30-160-6,3-02	АИР90L4	1450	2,2	8,0 – 13,8	550 – 345
4	BO-30-160-6,3-03	АИР100S4	1450	3,0	9,5 – 16,2	580 – 465

Note:
1) Other series of electric motors are allowed.

CHARACTERISTICS SUMMARY DIAGRAM

10400 – 34000 m³/hour

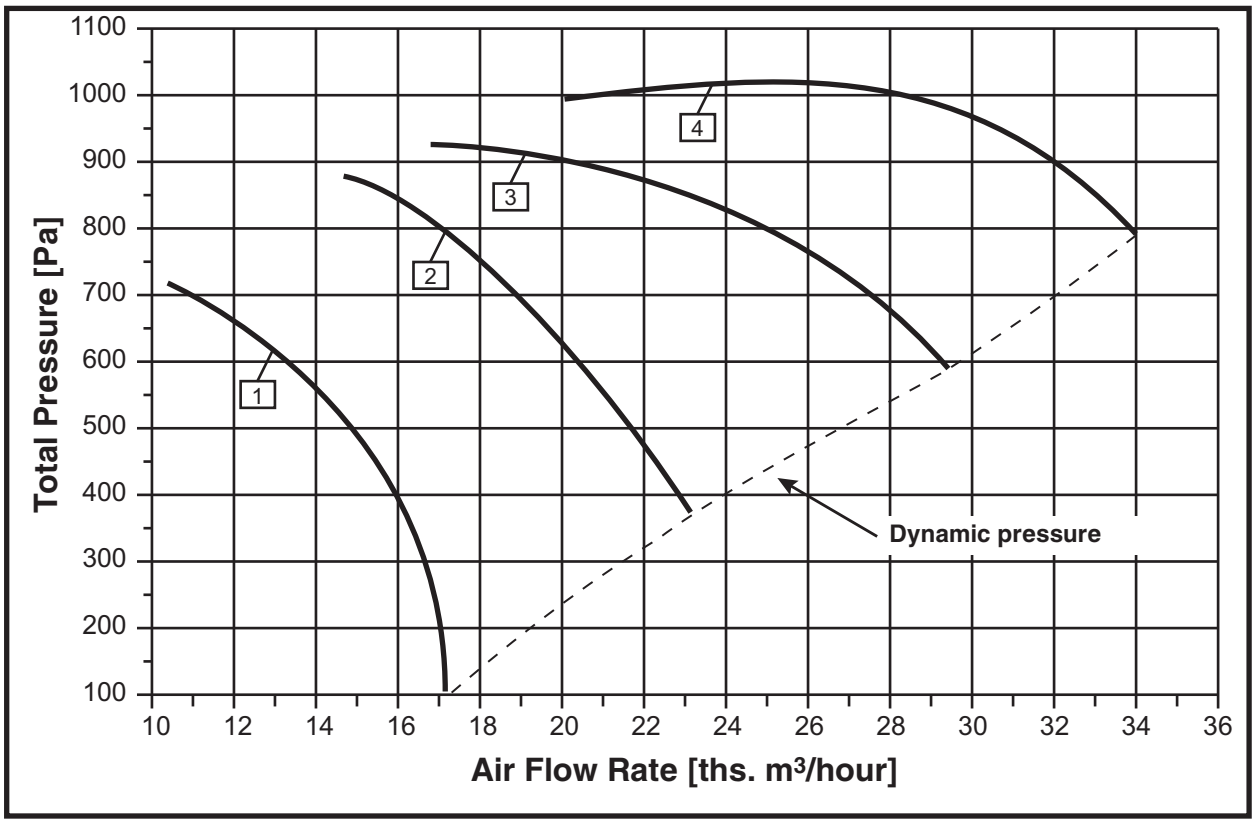

No.	Fan Type	Motor			Working area parameters	
		Type	Rotation speed [rpm]	Installed power [kW]	Capacity [ths. m³/hour]	Total Pressure [Pa]
1	BO-30-160-8-00	АИР100L4	1450	4,0	10,4 – 17,2	720 – 100
2	BO-30-160-8-01	АИР112M4	1450	5,5	14,7 – 23,2	880 – 375
3	BO-30-160-8-02	АИР132M4	1450	11,0	16,8 – 29,4	930 – 590
4	BO-30-160-8-03	АИР132M4	1450	11,0	20,0 – 34,0	990 – 790

CHARACTERISTICS SUMMARY DIAGRAM

13000 – 58000 m³/hour

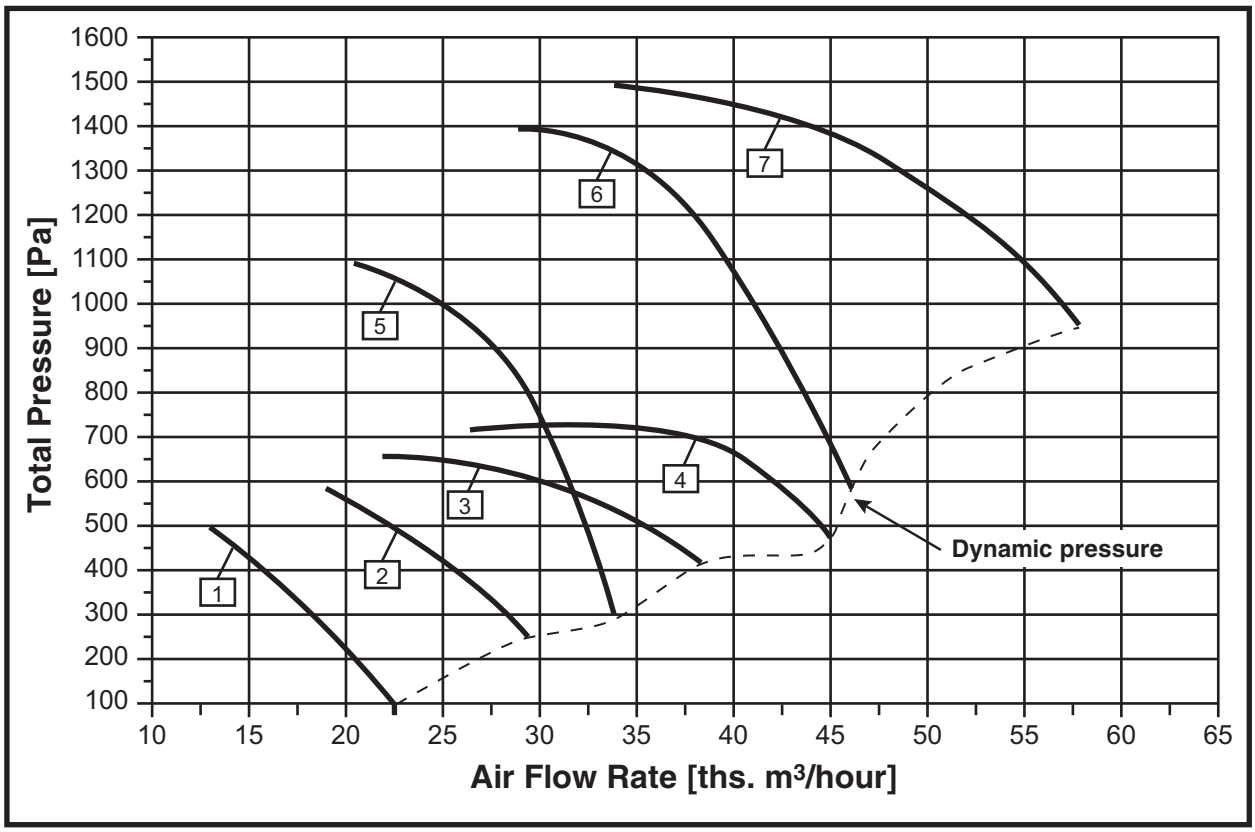

No.	Fan Type	Motor			Working area parameters	
		Type	Rotation speed [rpm]	Installed power [kW]	Capacity [ths. m³/hour]	Total Pressure [Pa]
1	BO-30-160-10-00	АИР112МВ6	950	4,0	13,0 – 22,5	500 – 100
2	BO-30-160-10-01	АИР132S6	950	5,5	19,0 – 29,5	590 – 250
3	BO-30-160-10-02	АИР132МВ6	950	7,5	22,0 – 38,5	660 – 420
4	BO-30-160-10-03	АИР160S6	950	11,0	26,5 – 45,0	720 – 570
5	BO-30-160-10-04	АИР132М4	1450	11,0	20,5 – 34,0	1100 – 295
6	BO-30-160-10-05	АИР160М4	1450	18,5	29,0 – 46,0	1400 – 590
7	BO-30-160-10-06	АИР180М4	1450	30,0	34,0 – 58,0	1500 – 950

CHARACTERISTICS SUMMARY DIAGRAM

27000 – 88500 m³/hour

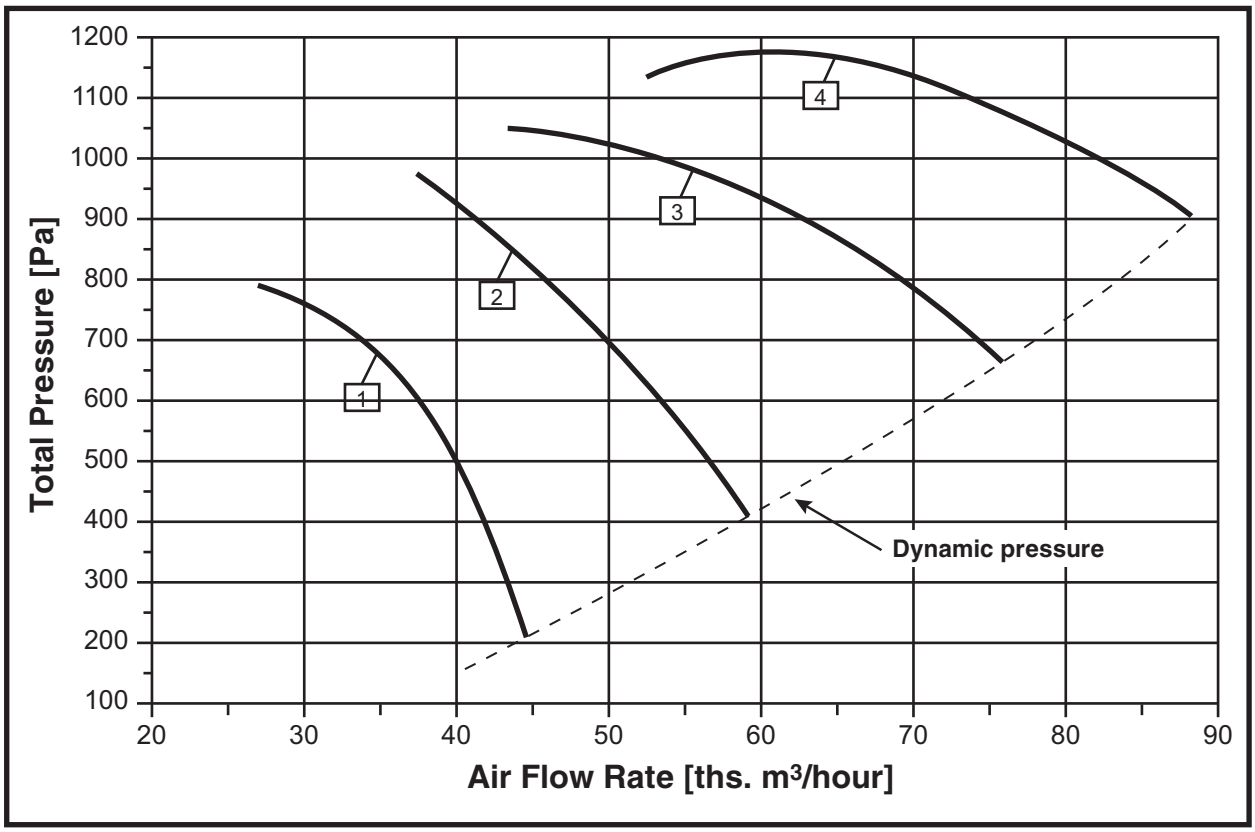

No.	Fan Type	Motor			Working area parameters	
		Type	Rotation speed [rpm]	Installed power [kW]	Capacity [ths. m³/hour]	Total Pressure [Pa]
1	BO-30-160-12,5-00	АИР160S6	950	11,0	27,0 – 44,5	790 – 213
2	BO-30-160-12,5-01*	АИР160M6	950	15,0	37,5 – 59,0	975 – 415
3	BO-30-160-12,5-02*	АИР200M6	950	22,0	43,5-76,0	1050-660
4	BO-30-160-12,5-03	АИР225M6	950	37,0	52,5-88,5	1130-900

Manufactured in accordance with TU 4862-019-64600223-13

300 – 8000 m³/hour

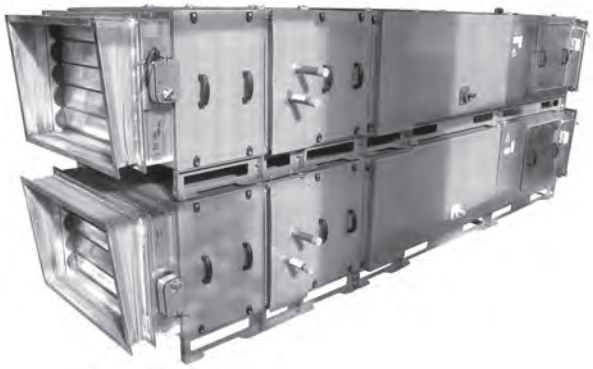

Fans are denoted as follows:

CBAH - 0,5 - A - 3
- 3 – Number of power grid phases: 1 – 1x220B, 3 – 3x380B
- A – Modification
- 0,5 – Enclosure index
- CBAH – Set type (Complex AHU, low profile)

Low profile complex AHU CBAH (SVAN) are designed for setting up and sustention of artificial climate with set-up parameters in attended rooms of industrial and public buildings and facilities by means of air supply and handling. Annual average and short-time air dustiness before handling shall not exceed 1 mg/m³ and 10 mg/m³ correspondingly. Units are designed for operation in conditions of moderate (У) and tropical (Т) climate of 3rd installation category pursuant to GOST 15150.

Root-mean-square value of external vibration sources vibration velocity at the place of set allocation shall not exceed 2 mm/s.

Units are assembled of separate modules with standardized connection dimensions (see Table 2). Units are mounted on steel supporting frame. See Figure 1 for set block-diagram. Units may be mounted both in horizontal and vertical position, except for units with heat exchanger (cooling). Units with heat exchanger may be installed horizontally only.

Complement of unit modules and their position in the unit structure are defined by the air handling technology set-up at the facility.

Fan unit is represented by the ВИПм (VIPm) series fans (see page 11) with reduced noise characteristics through the walls. Main parameters of fan unit are presented in Table 1.

ВИПм (VIPm) fans correspond to TU 4861-003-64600223-13.

Water-to-air heat exchangers (heating) Т-КВД (T-KVD) have heat-exchange surface made of two or three rows of copper tubes, ribbed with aluminium foil plates. Steel pipe headers have connecting pipes with 1” male pipe thread.

Coolant parameters:

- Maximum coolant temperature: 180°C;
- Working pressure: 1.2 mPa;
- Maximum allowable excess pressure: 1.8 mPa for water-type models, and 3.2 mPa for Freon-type models;
- Recommended velocity range for energy carrier in the pipe: 0.4 m/s to 1.75 m/s;
- Recommended air velocity: up to 3.5 m/s.

Untis may be completed with both water-to-air heat exchangers and VOKF-type freon heat exchangers, as well as condensing units (CU). CU are equipped with independent control system.

Unit selection for the certain order may be effected based on the order form (see Appendix 1 on page 202) or using “CVM-Selection” software. Additional components of the unit may also be specified in order form.

See page 185 for the AHU automatic control systems.

Unit Block Diagram:

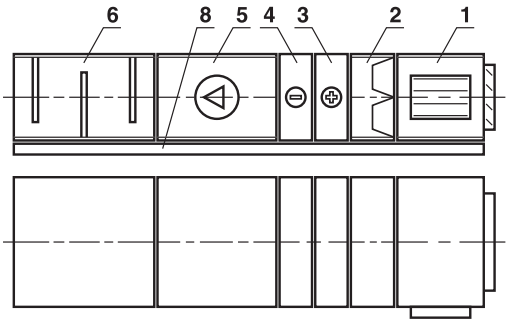

Block Diagram of a Unit with Stand-By Fan:

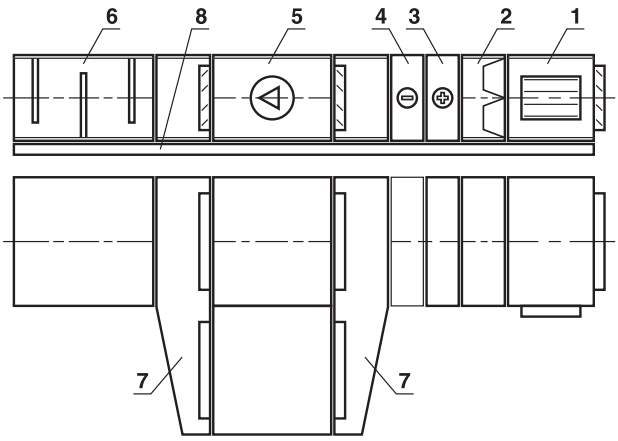

Fig. 1

1 – inlet and mixing box; 2 – filtering unit; 3 – heat exchanger (heating); 4 – heat-exchanger (cooling);
5 – fan unit; 6 – silencer; 7 – intermediate chamber; 8 – steel supporting frame.

Fan Modules Main Parameters

Table 1

Index + CBAH Unit Modification	Cross-Section [m²]	Fan Type	Electric Motor Type		Frequency n [min-1]	Power, N_y [kW]	Adjusted Sound Power Level L_{pA} [dB(A)]		
			Three-phase	Single-phase			At the Inlet	At the Outlet	Through The Walls
0,5-А	0,045	ВИПм 30х15А	АИС56А2	АИСЕ56А2	2900	0,09	62	66	45
0,5-Б	0,045	ВИПм 30х15Б	АИР56А2	АИРЕ56В2	2900	0,18	66	70	49
1-А	0,08	ВИПм 40х20А	АИР56А2	АИРЕ56В2	2900	0,18	66	70	49
1-Б	0,08	ВИПм 40х20Б	АИР56В2	АИРЕ56С2	2900	0,25	69	73	52
1-В	0,08	ВИПм 40х20В	АИР63А2	АИРЕ63В2	2900	0,37	70	74	53
1,6-А	0,125	ВИПм 50х25А	АИС56В4	АИСЕ56В4	1450	0,09	61	65	44
1,6-Б	0,125	ВИПм 50х25Б	АИР56В2	АИРЕ56С2	2900	0,25	69	73	52
1,6-В	0,125	ВИПм 50х25В	АИР63А2	АИРЕ63В2	2900	0,37	70	74	53
1,6-Г	0,125	ВИПм 50х25Г	АИР63В2	АИРЕ71А2	2900	0,55	74	78	57
1,9-А	0,15	ВИПм 50х30А	АИР 56А4	АИРЕ56А4	1450	0,12	61	62	45
1,9-Б	0,15	ВИПм 50х30Б	АИР 63В2	АИРЕ71А2	2950	0,55	71	72	55
1,9-В	0,15	ВИПм 50х30В	АИР 71А2	АИРЕ71В2	2950	0,75	75	76	59
1,9-Г	0,15	ВИПм 50х30Г	АИР 71В2		2950	1,1	76	77	60
2,25-А	0,18	ВИПм 60х30А	АИР56В4	АИРЕ56В4	1450	0,18	64	68	47
2,25-Б	0,18	ВИПм 60х30Б	АИР63В2	АИРЕ71А2	2900	0,55	74	78	57
2,25-В	0,18	ВИПм 60х30В	АИР71А2	АИРЕ71В2	2900	0,75	76	80	59
2,25-Г	0,18	ВИПм 60х30Г	АИР80А2		2900	1,5	77	81	60
2,7-А	0,21	ВИПм 60х35А	АИР 63В4	АИРЕ71А4	1450	0,37	67	68	51
2,7-Б	0,21	ВИПм 60х35Б	АИР 71В2		2950	1,1	76	77	60
2,7-В	0,21	ВИПм 60х35В	АИР 80А2		2950	1,5	78	79	62
2,7-Г	0,21	ВИПм 60х35Г	АИР 80А2		2950	1,5	79	80	63
3,55-А	0,28	ВИПм 70х40А	АИР71А4	АИРЕ71В4	1450	0,55	71	75	54
3,55-Б	0,28	ВИПм 70х40Б	АИР80А2		2900	1,5	79	83	62
3,55-В	0,28	ВИПм 70х40В	АИР80А2		2900	1,5	80	84	63
3,55-Г	0,28	ВИПм 70х40Г	АИР80В2		2900	2,2	83	87	66
5-А	0,4	ВИПм 80х50А	АИР80А4		1450	1,1	75	79	58
5-Б	0,4	ВИПм 80х50Б	АИР80В4		1450	1,5	76	80	59
5-В	0,4	ВИПм 80х50В	АИР80В2		2900	2,2	83	87	66
5-Г	0,4	ВИПм 80х50Г	АИР90L2		2900	3	84	88	67
6,3-А	0,5	ВИПм 100х50А	АИР90L4		1450	2,2	78	82	61
6,3-Б	0,5	ВИПм 100х50Б	АИР90L2		2900	3	84	88	67
6,3-В	0,5	ВИПм 100х50В	АИР100S2		2900	4	86	90	69
6,3-Г	0,5	ВИПм 100х50Г	2хАИР90L2		2900	2х3	93	93	80

List of the Main Modules with Dimensions

Table 2

Characteristics		Unit Nominal Sizes								
		CBAH 0,5	CBAH 1,0	CBAH 1,6	CBAH 1,9	CBAH 2,25	CBAH 2,7	CBAH 3,55	CBAH 5,0	CBAH 6,3
Width (max) [mm]		400	590	650	650	810	810	822	904	1100
Height (max) [mm]		260	450	500	550	550	600	604	704	750
Length (max) [mm]	Fan unit	526	620	670	750	790	790	910	1030	1080
	Receiving unit	404	590	650	650	810	810	822	904	1100
	Receiving unit (primary and fine refining, Pocket-size, EU4 – EU7)	420								
	Water-to-air heat exchanger (heating)	220								254
	Water-to-air heat-exchanger (cooling)									
	Electric heat exchanger	450	450	450-600	600	450-600	600	450-600	450-600	450-600
	Heat-exchanger (cooling) with direct expansion (with separator and tray)	620								474
	Silencer	800		1000						
	Intermediate chamberя	400								

Unit modules are provided with space for checkers and transducers installation.

Inlet and mixing boxes may be equipped with single vertical air valve installed in front or with two vertical air valves: one at the front and another on the side.

Air valves are supplied complete with manual drive or electric drive depending on order conditions. Valves are equipped with flapper gear drive.

Manufactured in accordance with TU 4862-017-64600223-13

300 – 8000 m³/hour

Standard set consists of:

- Air control valve with different drive options depending on automatics configuration
- Pocket filter EU3;
- Water-to-air or electric heat exchanger (heating);
- Water-to-air or direct expansion heat-exchanger (cooling)
- ВРПП (VRPP) fan.

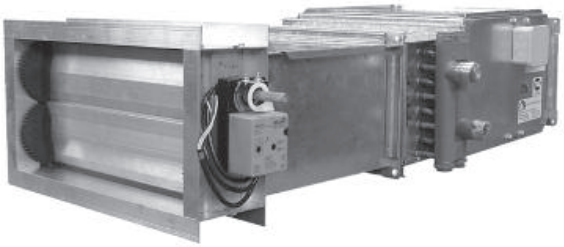

CVM Manufacturing Works produces standard units and enhanced configuration units against separate order.

ABC (AVS) units are completed with standardized components of duct systems of the following flow section similar to ВРПП (VRPP) fan flow sections (see page 7) in millimeters:

300x150; 400x200; 500x250; 500x300; 600x300; 600x350; 700x400; 800x500; 1000x500. Water-to-air heat exchangers (heating) have exchanging surface made of two or three rows of copper tubes, ribbed with aluminium foil plates. Steel pipe headers have connecting pipes with 1» male pipe thread.

Coolant parameters:
- Maximum coolant temperature: 180°C;
- Working pressure: 1.2 mPa;
- Maximum allowable excess pressure: 1.8 mPa for water-type models, and 3.2 mPa for Freon-type models;
- Recommended velocity range for energy carrier in the pipe: 0.4 m/s to 1.75 m/s;
- Recommended air velocity: up to 3.5 m/s.

Heat exchangers (heating) may be mounted in any position, except for the positions, when heat exchanger connecting pipes are directed upward or downward.

Unit selection for the certain order may be effected based on the order form (see Appendix 1 on page 202) or using “CVM-Selection” software. Additional components of the unit may also be specified in order form.

Ventilation box with removable filter

Valve

Flexible insert

Electric heater

See page 185 for the AHU automatic control systems.

Manufactured in accordance with TU 4861-020-64600223-13

Fans are denoted as follows:

HOBA - 1 B - 2 - 1 K

- K – Fastening method:
  - K – using mounting brackets
  - Ш1 – pin-mounted to ceiling (sideways flow)
  - Ш2 – pin-mounted to ceiling (downward flow);
- 1 – Number of power grid phases
  - 1 – 1x220V
  - 3 – 3x380V;
- 2 – Heat exchanger rows number code:
  - 2 – two-rows
  - 3 – three-rows;
- B – Special enclosure version (Explosion-proof);
- 1 – Set nominal size 1, 2, 3;
- HOBA – Set type (Pod-mount heating and ventilation unit).

Attached heating and ventilation units HOBA (NOVA) are designed for air heating using hot water circulating through aluminum-copper set heat exchanger (heating), and homogeneously distributing of air in a room using fan and guide vanes. Components are designed for operation in inside air. Heat-carrying agent shall not contain substances chemically active towards copper and steel.

Operating pressure of water-to-air heat exchanger (heating) shall not exceed 1.2MPa. Temperature shall not exceed 180 °C.

Implementation of axial fan with special profile blades provides low noise level and low energy consumption during operation.

HOBA (NOVA) unit housing is made of galvanized steel. Optionally, housing may be coated with powder paint. Equipment is supplied completed with control cabinet.

Unit configuration is presented in Figure 1.

Overall and installation dimensions are listed in Table 1. Unit characteristics are presented in Table 2.

Automatic Control System see p.193.

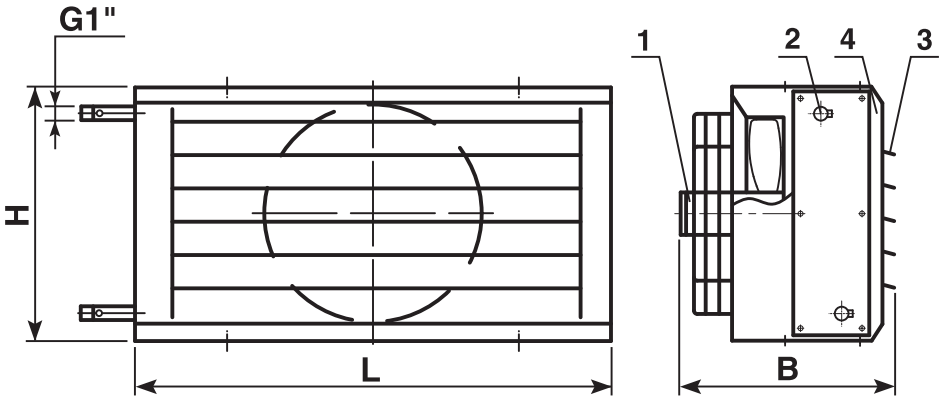

Fig. 1

1 – fan; 2 – heat exchanger (heating); 3 – guide vanes; 4 – housing.

Table 1

Set Name	Dimensions [mm]								
	B	H	L	W_{min}	l	b	b1	h	h1
HOBA - 1	480	460	732	165	400	540	200	200	130
HOBA - 2	462	540	833	180	505	550	144	250	190
HOBA - 3	555	630	1143	200	700	570	200	300	230

Table 2

Characteristics	Unit Nominal Sizes					
	HOBA 1-2	HOBA 1-3	HOBA 2-2	HOBA 2-3	HOBA 3-2	HOBA 3-3
Air flow rate (min) [m³/hour]	2000	1800	3000	2600	5000	4600
Heating power [kW]*	15,8	20,6	21,7	25,3	37,7	47,2
Heating temperature [°C]*	23,7	34,3	21,7	29,6	22,6	30,8
Heat exchanger cross-section	600x350		700x400		1000x500	
Voltage [V]	1x220		3x380 (1x220)		3x380 (1x220)	
Motor power [kW]	0,11		0,22		0,25	
Weight [kg]	37	39	43,5	47,5	75	77
Sound power [dBA]	69	69	72	72	75	75

*) At the water temperature of 95/70 °C and air temperature of 20 °C.

Provision of optimal quantity of heating and ventilation unit necessary for the room heating and maintaining of set-up temperature requires definition of demanded heat power enough to compensate heat loss in a room.

Room heat loss mainly depends on:

- estimated ambient temperature
- required (set-up) indoor temperature
- heat engineering parameters of surrounding structures.

Demanded heat power definition requires, apart from heat loss, consideration for heat gain, for instance, from working indoor machinery, equipment and people.

HOBA (NOVA) units selection is performed using software allowing to define required quantity of HOBA (NOVA) units of a certain nominal size. If required, software allows calculation of the building heat loss based on aggregated data. Recommended as a result of calculation minimal height of the HOBA (NOVA) unit installation is defined based on condition that average air speed in a jet from set shall not exceed 0.2 m/s at the height above floor of no more than 1.5m.

The assignment for selection of the unit is made upon submission of ORDER FORM (see Appendix 1 on page 203).

Options of HOBA (NOVA) Unit Installation

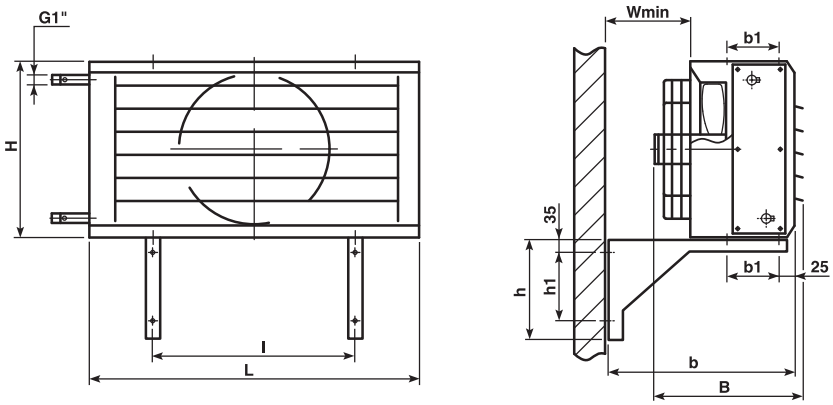

Bracket mounted

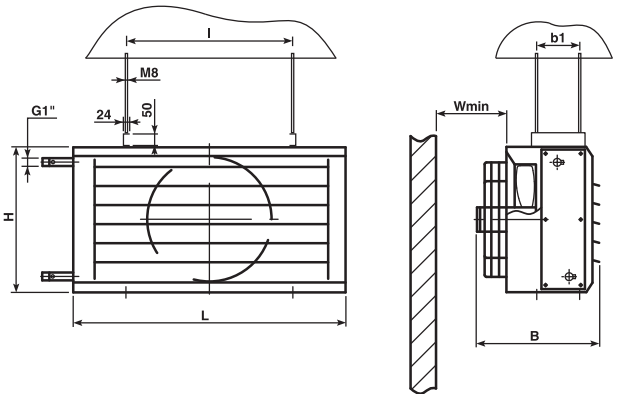

Pin mounted to the ceiling (sideways flow)

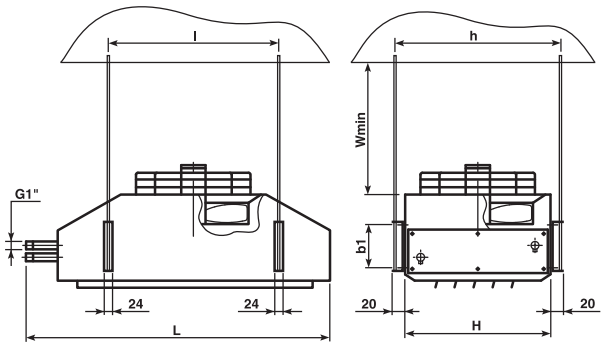

Pin mounted to the ceiling (downwards flow)

Manufactured in accordance with TU 4861-013-64600223-13

Fans are denoted as follows:

3BB – 1.2 – B – 01 – B3 – 2,5 – K – Пр

- Enclosure: Пр – right, Л – left
- Slot position:
  К – along the short side of the duct section,
  Д – along the long side of the duct section
- Slot length [m];
- Heat exchanger (heating) type:
  B2, B3 – water-to-air: two-rows, three-rows
  П2, П3 – steam-type: two-rows, three-rows
- Slot width code
- Special enclosure version (Explosion-proof)
- Impeller version code
- Curtain duct nominal size
- Curtain type (Gateway air curtain)

ZVV air curtains are designed for gateways protection against sweep of warm or cold outside air through opening with area of 4 m^2 and more by means of forming of an air jet in the gate opening plane. Air jet moving from the curtain slot mixes with outside air on one side and with inside air on the other side gaining definite average temperature.

Average jet temperature $t_{см}$ in the pertinent curtain at the farthest from the slot point of gate opening shall be in standardized limits according to SNiP 23-01-99* and SP 60.13330.2012 (standardizes mixture temperature only for the cold season).

Average jet temperature $t_{см}$ value depends on the following parameters:

- Increasing of air temperature in a curtain – $t_з$, °C;
- Outside air temperature – $t_н$ °C;
- Inside air temperature – $t_в$, °C;
- Wind velocity – v, m/s;
- Air speed at the outlet of the curtain slot – U, m/s;
- Gate size along the jet direction – B, m;
- Slot width – b, m.

Curtains are selected using software allowing definition of jet trajectory and mixture temperature at the jet tail for the curtain air nominal size. The assignment for selection of the curtain is made upon submission of ORDER FORM (see Appendix 1 on page 204).

Curtain structure is presented on the Figure below:

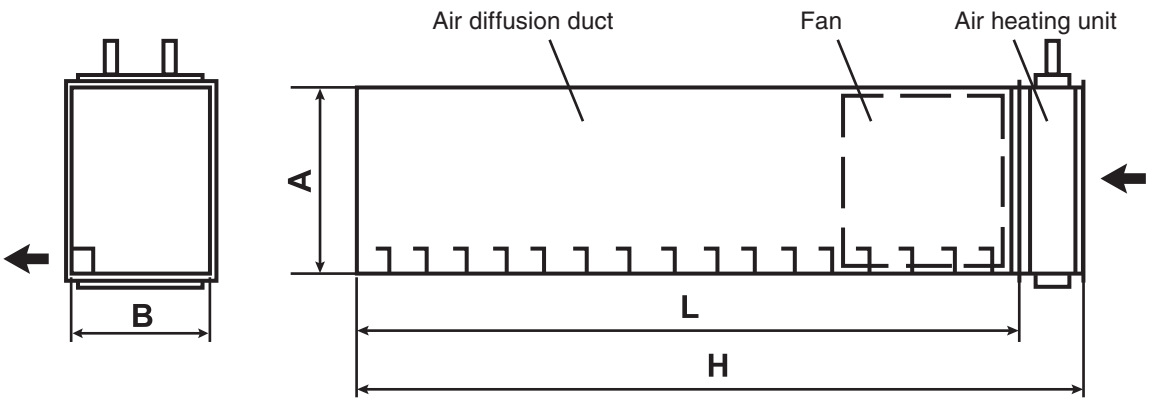

3BB (ZVV) air curtain characteristics are presented in Table 1.

ZVV Curtains Characteristics

Table 1

Characteristics	Curtain Nominal Sizes										
	3BB-0.2	3BB-1.1	3BB-1.2	3BB-2.1	3BB-2.2	3BB-3.1	3BB-3.2	3BB-4.1	3BB-4.2	3BB-5.1	3BB-5.2
Air diffuser cross-section AxB [mm]	600 x 410	700 x 470	700 x 470	800 x 530	800 x 530	900 x 590	900 x 590	1100 x 660	1100 x 660	1400 x 750	1400 x 750
Min air flow rate [m³/hour]	3500	4000	5000	6000	8000	9200	11200	13000	16500	18800	24000
Heat power of two-row water-to-air or steam heat exchanger [kW]	23,3	27	33	40	53	61	75	87	110	125	160
Heat power of three-row water-to-air or steam heat exchanger [kW]	35	40	50	60	80	91	112	130	165	187	240
Heat power of tubular electric heating element (reduced/max) [kW]	27/45	27/45	45	45/67	67	67/90	90	---	---	---	---
Maximum water flow of two-row water-to-air air heat exchanger [kg/hour]*	840	972	1200	1440	1900	2200	2700	3130	4000	4500	5760
Maximum water flow of three-row water-to-air heat exchanger [kg/hour]*	1260	1460	1800	2160	2900	3300	4050	4700	5950	6750	8640
Water pressure drop in the two-row water-to-air heat exchanger in case of maximum water flow [kPA]	13	7	11	5	9	13	15	27	44	17	28
Water pressure drop in the three-row water-to-air heat exchanger in case of maximum water flow [kPA]	13	10	15	6	11	15	22	32	51	23	37
Fan rotation speed [rpm]	1500										
Voltage [V]	3x380										
Electric motor power [kW]	0,55	0,75	1,1	1,1	1,5	2,2	3	4	5,5	7,5	11
H dimension (max) for the air-type or steam heat exchanger [mm motor power [kW]	L+300										
Noise level [dBA]**	75	83	85	86	88	89	92	93	95	96	99
Curtain fan weight [kg]	35	38	42	52	58	68	75	105	117	135	155
Curtain housing weight [kg/long meter]	32	37	37	42	42	47	47	57	57	70	70

*) At the water temperature of 95/70 °C.
**) Noise characteristics are defined in accordance with GOST 31353.3-2007 and represented by the values in dBA of adjusted sound power level L_{pA}. See page 56 to learn how to define sound pressure level L at the certain distance from the curtain.

In case of different heat-carrying agent parameters, air temperature at the curtain slot outlet is defined using following equation:

$t_3 = 3000*Q_T/G_3$,

where:

Q_T – heat exchanger (heating) heating power [kW]

G_3 – air flow rate [m³/hour].

Air diffusing box is equipped with straight-through radial fan. Air is supplied in the duct through the butt-end equipped with a fan. Air exhaust is performed through the side slot along the whole length of the duct. Air is heated (by the value of no less than 20 °C) using heat exchanger (heating) connected to the duct air intake end forming common air channel with rectangular section. Curtains provide angle of jet axis initial displacement from the gate plane equal to 15°. Jet offset inside the room may be herewith reduced under the wind pressure effect.

Curtain longitudinal size exceeds slot length only by the value of heat exchanger (heating) longitudinal size, which is the main distinctive feature of curtains upon high cost effectiveness and reduced spatial requirements longwise the duct.

Curtains are available with right-hand or left-hand slot location in relation to air flow direction in a duct, and slot location on long or short side of the duct cross-section to expand capabilities of curtain installation in limited space above serviced gateway or next to it. Curtains are made of galvanized steel without zinc coating disturbance. Curtains are equipped with water-to-air, steam or electric heat exchanger (heating). Steam working pressure shall not exceed 1.2MPa, and temperature shall not exceed 180 °C.

Curtain design is protected by the Useful Model Certificates. See page 195 to learn about air curtain automatic control systems.

Manufactured in accordance with TU 4864-013-64600223-13

Fans are denoted as follows:

ЗИС - 1 В - 01 В3 - 2,5 К Пр

- Enclosure: Пр – right-hand, Л – left-hand;
- Slot position: К – along the short side of the duct section, Д – along the long side of the duct section;
- Slot length [m] (multiple of 0.25m);
- Heat exchanger (heating) type: В2, В3 – water-to-air: two-rows, three-rows; П2, П3 – steam: two-rows, three-rows;
- Slot width code;
- Special enclosure version (Explosion-proof);
- Curtain duct nominal size;
- Curtain type (complex industrial curtain.

ЗИС (ZIS) air curtains are designed for open gateways protection against sweep of warm or cold outside air by means of forming of an air jet with the temperature different from the outside air temperature in the gate opening plane. Air jet moving from the curtain slot mixes with outside air on one side and with inside air on the other side gaining definite average temperature. Average jet temperature t_{CM} in the pertinent curtain at the farthest from the slot point of gate opening shall be in standardized limits according to SNiP 23-01-99* and SP 60.13330.2012 (standardizes mixture temperature only for the cold season).

Average jet temperature t_{CM} depends on the following parameters:

- Increasing of air temperature in a curtain – t_3, °C;
- Outside air temperature – t_H °C;
- Inside air temperature – t_B, °C;
- Wind velocity – v, m/s;
- Air speed at the outlet of the curtain slot – U, m/s;
- Gate size along the jet direction – B, m;
- Slot width – Ь, m.

Curtains are selected using software allowing picking-up the required nominal size of a curtain and required quantity of modules (if one module is not enough at the specified module size limitation), as well as defining of jet trajectory and mixture temperature at the jet tail for the curtain air nominal size. The assignment for selection of the curtain is made upon submission of ORDER FORM (see Appendix 1 on page 204).

Curtain structure is presented on the Figure below:

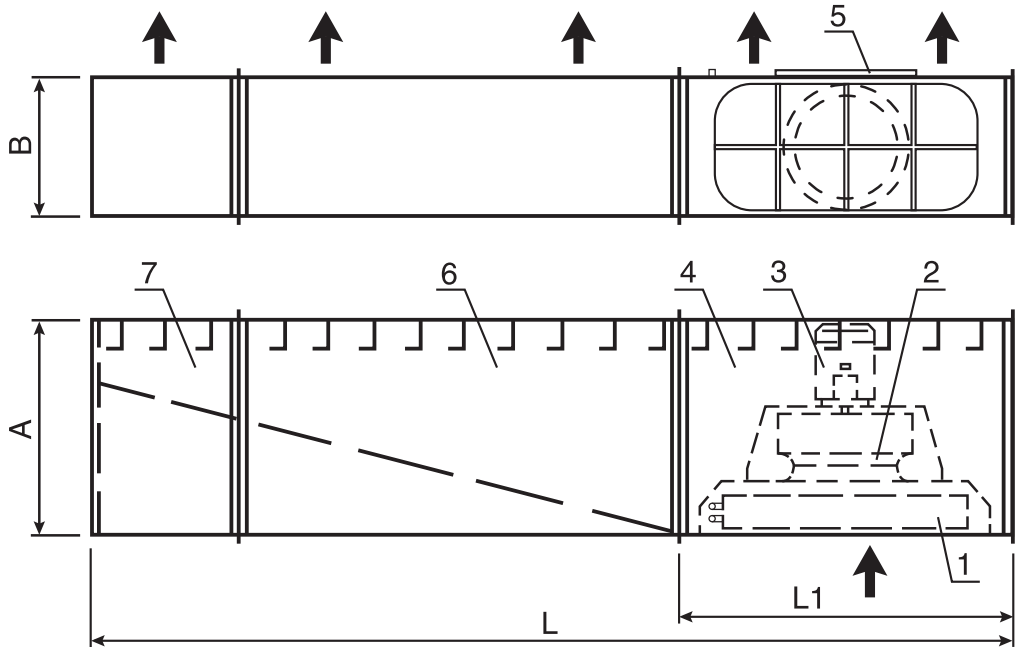

1 – heat exchanger; 2 – fan; 3 – electric engine; 4 – fan unit;
5 – mounting door; 6 – intermediate box; 7 – end box.

ЗИС (ZIS) air curtain characteristics are presented in Table 1.

ЗИС (ZIS) Curtains Characteristics

Table 1

Characteristics	Curtain Nominal Sizes					
	ЗИС - 1	ЗИС - 2	ЗИС - 3	ЗИС - 4	ЗИС - 5	ЗИС - 6
Размер сечения воздухораспределителя AxB, мм	600x410	700x470	800x530	900x590	1100x660	1400x750
Min air flow rate [m³/hour]	2800	3600	5400	8300	12000	17000
Heat power of two-row water-to-air or steam heat exchanger [kW]	18,7	24	36	55	80	113
Heat power of three-row water-to-air or steam heat exchanger [kW]	28	36	54	82,5	120	170
Maximum water flow of two-row water-to-air heat exchanger [kg/hour]*	675	864	1300	1980	2880	4070
Maximum water flow of three-row water-to-air heat exchanger [kg/hour]*	1020	1300	1950	3000	4350	6100
Water pressure drop in the two-row water-to-air heat exchanger in case of maximum water flow [kPA]	10	5	4	9	22	17
Water pressure drop in the three-row water-to-air heat exchanger in case of maximum water flow [kPA]	10	7	5	12	26	17
Fan rotation speed [rpm]	1500					
Voltage [V]	3x380					
Electric motor power [kW]	0,37	0,75	1,1	2,2	4	7,5
Noise level [dBA]**	73	83	86	89	93	96
Curtain fan weight [kg]	40	43	50	68	135	183
Length L [mm]	Defined at the order					
Length L_1 [mm]	1000	1000	1000	1250	1500	1750
Curtain housing weight [kg/long meter]	30	33	36,7	42	49,2	59,5

*) At the water temperature of 95/70 °C.

**) Noise characteristics are defined in accordance with GOST 31353.3-2007 and represented by the values in dBA of adjusted sound power level L_{pA}. See page 26 to learn how to define sound pressure level L at the certain distance from the curtain.

In case of heat exchanger (heating) using, air temperature at the curtain slot outlet is defined using following equation:

$t_3 = 3000 * Q_T / G_3$,

where:

Q_T – heat exchanger heating power [kW]

G_3 – air flow rate [m³/hour].

Air is supplied in the diffusing duct using built-in radial fan. Air intake is performed from the smaller side of the air diffusing box cross-section. Air is heated by heat exchanger (heating) built in the module equipped with a fan. Heat exchanger (heating) and Air diffusing box with built-in fan form common air channel with rectangular section and lateral air exhaust through slot along the whole length of the duct. ЗИС (ZIS) curtains provide angle of jet axis initial displacement from the gate plane equal to 15°. Jet offset inside the room may be herewith reduced under the wind pressure effect. Each ЗИС (ZIS) curtain nominal size may be provided with various slot width values, which show the best correlation with certain curtain operation conditions.

Curtain longitudinal size does not exceed slot length, which is the main distinctive feature of ЗИС (ZIS) curtains upon high cost effectiveness and the lowest spatial requirements for installation.

Curtains are available with right-hand or left-hand slot location in relation to air flow direction in a duct, and slot location on long or short side of the duct cross-section to expand capabilities of curtain installation in limited space above serviced gateway or next to it. If it is required to provide higher values of air flow rate per 1 long meter of the slot length, then ЗИС (ZIS) curtains may be installed one above the other (in case of vertical duct position), or one next to the other (in case of horizontal duct position) touching with duct blind ends. ЗИС (ZIS) curtains selection software allows selection of curtain modules on the principle of minimum modules quantity required for provision of demanded flow-rate, or definition of required modules quantity of nominal size with minimum cross-section (in case of limited space requirements for curtain installation). Curtains are made of galvanized steel without zinc coating disturbance. Air curtains are equipped with water-to-air or steam heat exchanger (heating).

Heat-carrying agent shall not contain substances chemically active towards copper and steel. Operating pressure of water-to-air heat exchanger (heating) shall not exceed 1.2MPa. Temperature shall not exceed 180 °C.

See page 195 to learn about air curtain automatic control systems.

Manufactured in accordance with TU 4864-013-64600223-13

Fans are denoted as follows:

ЗВШ – 1 В А – Э – 1

- 1 – Number of power grid phases: 1 – single-phase, 3 – three-phase;
- Э – Heat exchanger (heating) type: Э – electric, В – water;
- А – Housing length code: А – 1m, Б – 1.5m;
- В – Special enclosure version (Explosion-proof);
- 1 – Curtain duct nominal size;
- ЗВШ – Curtain type (Wide-jet air curtain).

ЗВШ «Клим» (ZVSh ''Klim'') air curtains are designed for making a barrier on the way of warm or cold outside air flow through open gateways (doors). This is achieved by formation of air jet with the temperature equal to the inside air temperature in a gate opening plane. While moving away from curtain slot, jet mixes with outside air from one side, and with indoor air from the other side, reaching some average temperature value. If a curtain is selected correctly, then jet average temperature in the gate opening point farthest from slot shall be located within range rated by SP 60.13330.2012. ЗВШ (ZVSh) curtains are designed in such a way that heat exchanger (heating) implementation is not required, but may be equipped with electric or water-to-air heat exchanger. Owing to supply of the warmest air wide-jet, the jet average temperature equal to 5-8°C may be maintained at the minimum outside air temperature and maximum wind velocity.

Each ЗВШ (ZVSh) curtain standard size may be produced with various slot sizes showing the best correlation with specific air curtain operation conditions.

Air curtains selection is performed using special software enabling to define mixture temperature at the jet tip of the certain curtain standard size. You can get this software and all required advisory upon request. Request for air curtain selection is submitted upon filling in of ORDER FORM (see Appendix 1 on page 204).

ЗВШ (ZVSh) air curtain configuration is presented on a Figure:

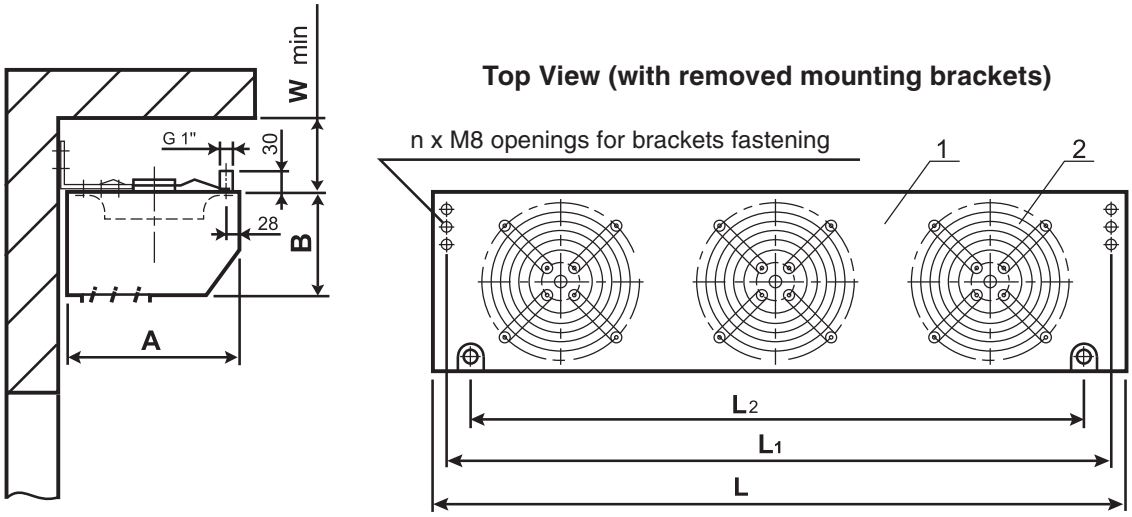

Air diffusion duct with built-in fans form common air channel with air exhaust performing through an slot made along the whole length of a duct. Air supply to air diffusion duct 1 is performed through intake openings from the side opposite to the slot location by the action of built-in axial fans 2. ЗВШ (ZVSh) air curtains provide angle of jet axis initial displacement from the gate plane equal to 15 degrees. Jet sweep inside the room under wind load can be therewith reduced.

The main distinctive feature of ЗВШ «Клим» (ZVSh ''Klim'') air curtains is high cost efficiency. Curtains are located above protected gateway or next to it from one or both sides. Curtains are supplied with various length of air diffusion duct for the purpose of optimal selection of total curtain length in accordance with gateway width (height). Total curtain length may be shorter than gateway width (height) by no more than a half of the curtain short duct length (A). Air intake above curtain requires free space of at least 1/2 of air curtain duct height (see tables on page 82).

Curtain air diffusion duct is made of steel and coated with powder paint.

All air curtains are certified by the GOSTR Certification System and have sanitary and epidemiological inspection report.

Characteristics of ЗВШ «Клим» (ZVSh "Klim") air curtains without heat exchanger

Characteristics	Curtain Nominal Sizes									
	ЗВШ-1А	ЗВШ-1Б	ЗВШ-2А	ЗВШ-2Б	ЗВШ-3А	ЗВШ-3Б	ЗВШ-4А	ЗВШ-4Б	ЗВШ-5А	ЗВШ-5Б
Air diffusing box cross-section A x B [mm] Air diffusing box	340x200	340x200	400x270	400x270	440x230	440x230	535x300	535x300	660x350	660x350
length L [m]	700	1050	900	1350	1000	1500	1080	1620	700	1400
Distance between bracket fastening bolts L_1 [mm]	670	1020	860	1310	960	1460	1040	1580	660	1360
W_{min} , [mm]	115		165		165		180		200	
Air flow rate (min) [m³/hour]	1280	1920	3450	5175	5000	7500	7990	11990	8820	17640
Motor power, [kW]	2x0.05	3x0.05	2x0.135	2x0.135	2x0.135	3x0.135	2x0.27	3x0.27	0.78	2x0.78
Sound power, [dBA]	40	42	46	50	49	51	52	54	56	59
Weight [kg]	7,4	11	14,8	22,3	16,5	25,5	23,5	35	24	48
Supply voltage	1x220V				1x220V or 3x380V				3x380V	

Characteristics of ЗВШ «Клим» (ZVSh "Klim") air curtains with electric heat exchanger

Characteristics	Curtain Nominal Sizes					
	ЗВШ-1А-Э	ЗВШ-1Б-Э	ЗВШ-2А-Э	ЗВШ-2Б-Э	ЗВШ-3А-Э	ЗВШ-3Б-Э
Air diffusing box cross-section A x B [mm]	340x200	340x200	400x270	400x270	440x230	440x230
Air diffusing box length L [m]	700	1050	900	1350	1000	1500
Distance between bracket fastening bolts L_1 [mm]	670	1020	860	1310	960	1460
W_{min}, [mm]	120	120	150	150	170	170
Air flow rate (min) [m³/hour]	1280	1920	2600	3900	5000	7500
Motor power [kW]	2x0.05	3x0.05	2x0.135	3x0.135	2x0.135	3x0.135
Electric power of each tubular electric heating element [kW]	5	7	9	13,5	17	25
Tubular electric heating elements quantity [ea.]	3				6	12
Supply voltage	1x220V – electric motors; 3x380V wye-connected tubular electric heating elements					
Sound power,[dBA]	40	42	46	50	49	51
Weight [kg]	15,5	22,5	28,0	39,0	33,0	48,0

Characteristics of ЗВШ «Клим» (ZVSh "Klim") air curtains with water-to-air heat exchanger

Characteristics	Curtain Nominal Sizes									
	ЗВШ-3А-В-1	ЗВШ-3А-В-3	ЗВШ-3Б-В-1	ЗВШ-3Б-В-3	ЗВШ-4А-В-1	ЗВШ-4А-В-3	ЗВШ-4Б-В-1	ЗВШ-4Б-В-3	ЗВШ-5А-В-3	ЗВШ-5Б-В-3
Air diffusing box cross-section A x B [mm]	440x300	440x300	440x300	440x300	535x300	535x300	535x300	535x300	660x350	660x350
Air diffusing box length L [mm]	1000	1000	1500	1500	1080	1080	1620	1620	700	1400
Distance between bracket fastening bolts L_1 [mm]	960	960	960	1460	1040	1040	1580	1580	660	1360
Number of openings for brackets fastening n	6	6	6	6	6	6	6	6	6	6
Distance W_{min}, [mm]	170				180				300	
Air flow rate (min) [m³/hour]	5000	5000	7500	7500	7400	7400	11100	11100	7800	15600
Electric motor power [kW]	2x0,135	2x0,135	3x0,135	3x0,135	2x0,27	2x0,27	3x0,27	3x0,27	0,78	2x0,78
Sound pressure [dBA]*	49	49	51	51	52	52	54	54	56	59
Weight [kg]	40	40	40	50	51	51	78	78	40	59
Water-to-air heat exchanger power at the water/air temperature of 95/70 [kW]	16,5		25		24,5		37		26	52
Distance between water-to-air heater connecting pipes L_2 [mm]	875		1375		950		1475		575	1275
Supply voltage	1x220V or 3x380V								3x380V	

* at a distance of 3 m

Automatic Control System see p.195.

CVM®
www.cvm.ru

CENTRAL AIR-CONDITIONERS

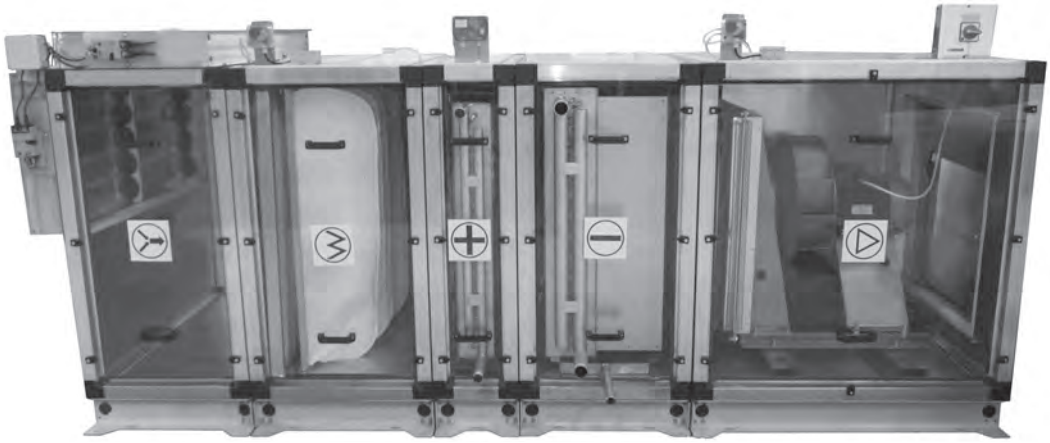

Manufactured in accordance with TU 4862-001-64600223-2011

CVM Manufacturing Works brings to your attention series of central air-conditioners ККЦМ (KKTsM) (Framed Modular Central Air-Conditioner).

We are ready to provide our customers with professional advice on selection of central air-conditioners considering all structural and design features as well as optimal price/quality ratio. Engineering companies and our dealers in different regions of Russia are offered with ККЦМ (KKTsM) central air-conditioners computer selection software

with prior training. ККЦМ (KKTsM) central air-conditioners are composed of constructional and functional modules.

Functional modules serve for air handling processes. Thus, our equipment is capable to solve all possible tasks of air-conditioning system: heating and cooling, drying and humidification and filtration to any degree of air purity. Our air conditioners may be used in all spheres of technology: office buildings and trade centers, microelectronics and medicine, petroleum chemistry, clean room facilities, etc.

Central air-conditioners are denoted as follows:

ККЦМ13L – 50F – 68 – 20 – 30 – 10 – O – У3

- Climatic version;
- Design variant: O – General purpose industrial grade;
- Fan unit;
- Water-type air cooler unit;
- Water-type air heater unit;
- Filter unit;
- Enter section with valve (F, L, R, U, D);
- Operation side: R-right, L-left (in special cases operation side may be located on top (U) or bottom (D));
- Nominal size;
- Framed Modular Central Air-Conditioner

15 nominal sizes of ККЦМ (KKTsM) central air-conditioners with rated capacity ranging from 3,200 m³/hour to 100,000 m³/hour and total pressure of up to 2,500Pa are currently available for supply. Wide range of standard sizes allows performing optimal selection of air velocity and plant cross-section. There are options of air handling units capable of operation with air flow and pressure outside working range.

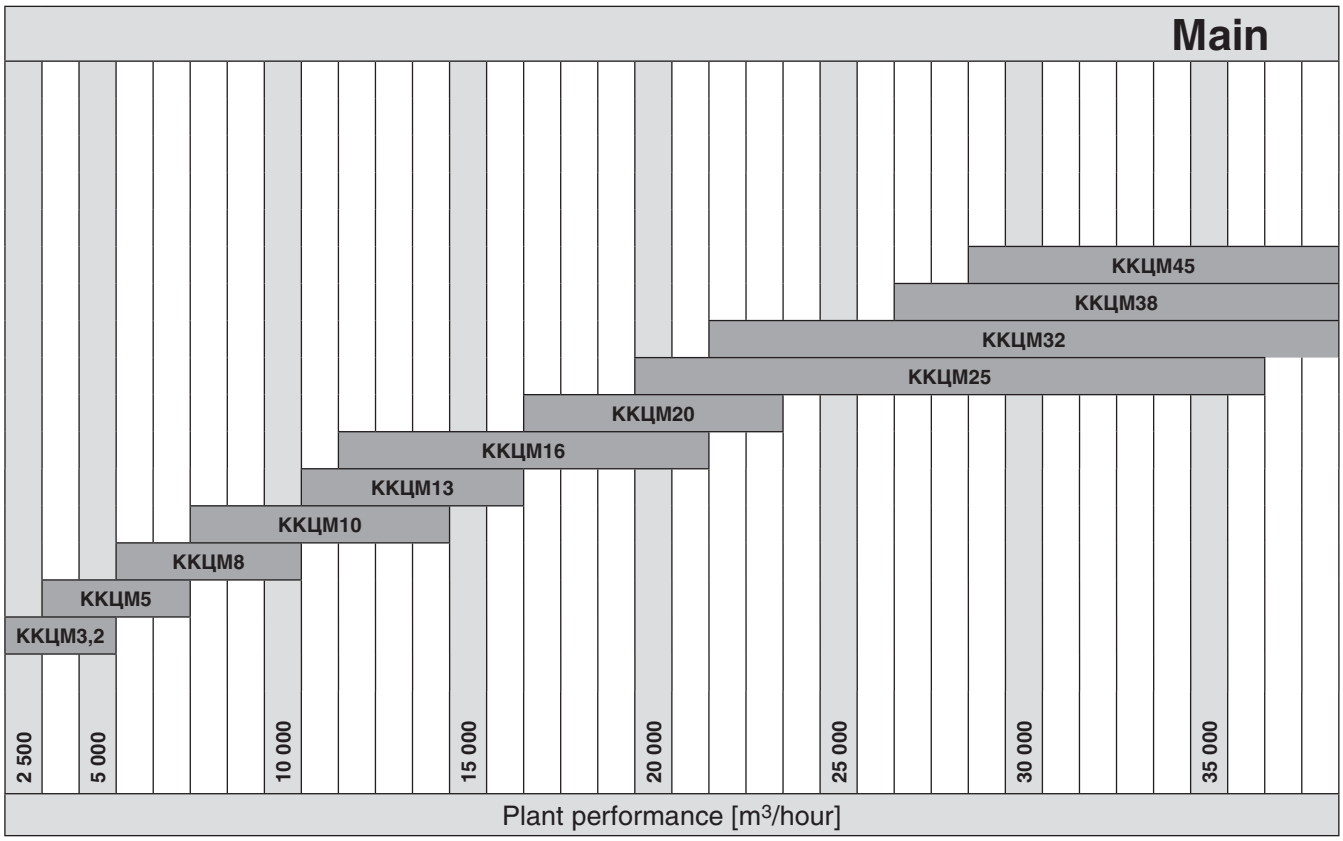

Maximum overall dimensions of conditioner composite modules do not exceed size of shipping container. Modules with large nominal sizes (starting from ККЦМ45 (KKTsM45) and higher) are supplied knocked-down at customer's request.

Automatic Control System see p.184.

CVM Manufacturing Works reserves the right to change the design of ventilation equipment as a part of continuous improvement process.

Plant Dimensions

Type	Capacity Rate [m³/hour]	Front Dimensions		Module Height with Frame H [mm]	Frame Height [mm]	Sandwich Thickness [mm]
		Module Width B [mm]	Module Height h [mm]			
ККЦМ3,2	3200	905	700	820	120	45
ККЦМ5	5000	1010	865	985	120	45
ККЦМ8	8000	1305	860	980	120	45
ККЦМ10	10000	1250	1100	1220	120	45
ККЦМ13	13000	1315	1165	1285	120	45
ККЦМ16	16000	1315	1460	1580	120	45
ККЦМ20	20000	1620	1465	1585	120	45
ККЦМ25	25000	1915	1490	1610	120	45
ККЦМ32	32000	1915	1810	1930	120	45
ККЦМ38	38000	1925	2080	2200	120	45
ККЦМ45	45000	2230	2060	2180	120	45
ККЦМ56	56000	2700	2180	2300	120	45
ККЦМ63	63000	2700	2580	2700	120	45
ККЦМ80	80000	3200	2580	2700	120	45
ККЦМ100	100000	3700	2580	2700	120	45

Nominal Sizes

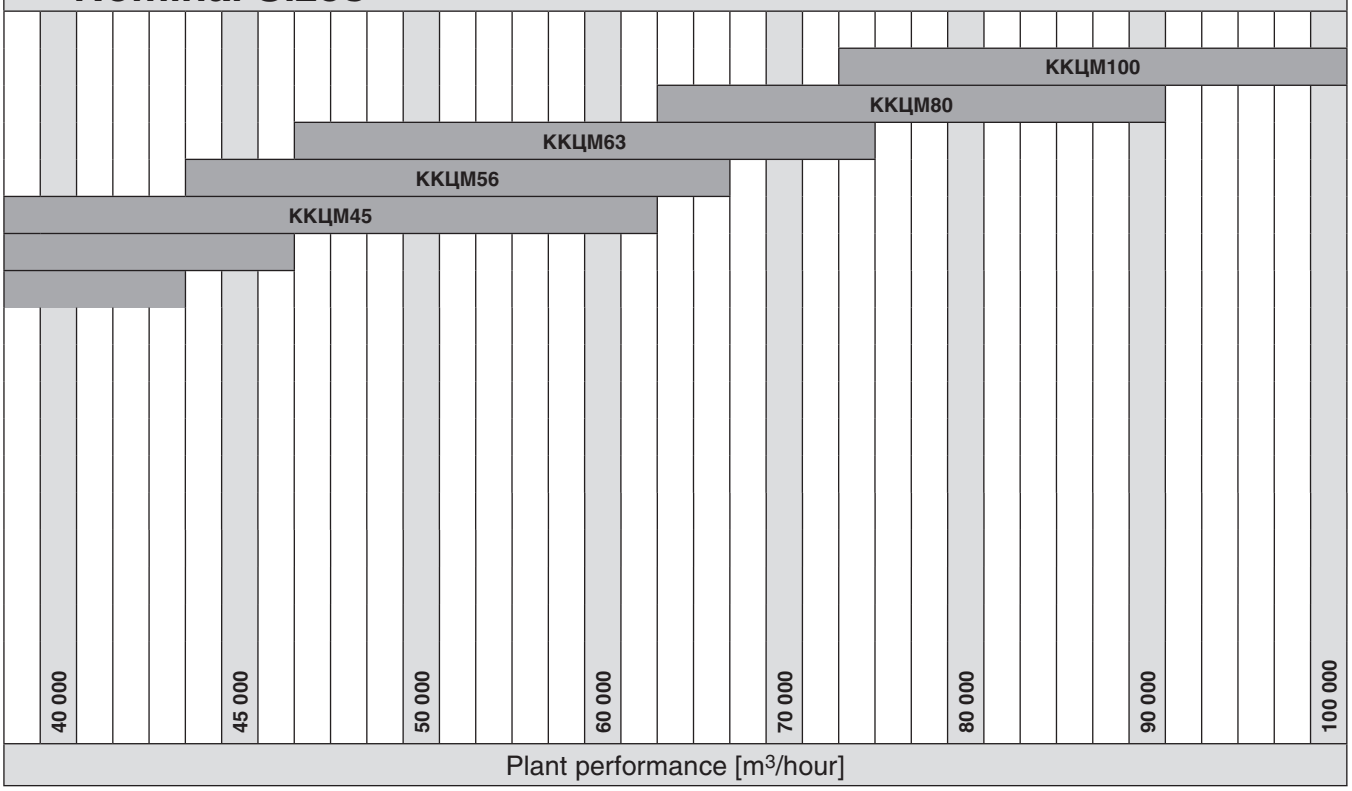

Module Housing

Housing consists of aluminum frame and sandwich panels of 45 mm thick.

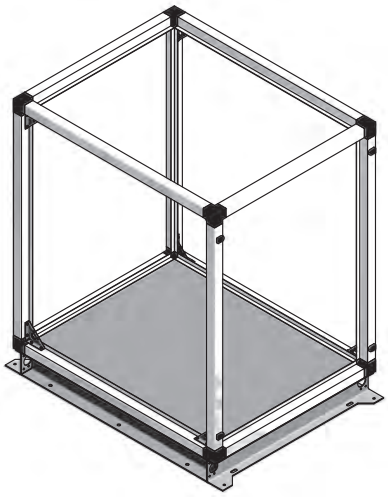

Frame-panel structure has the following advantages:

- Absolutely smooth inside surface of module
- Screws aren't seen on the inside of panels
- There are no heat channels

Three-way angle joint is made of strengthened nylon

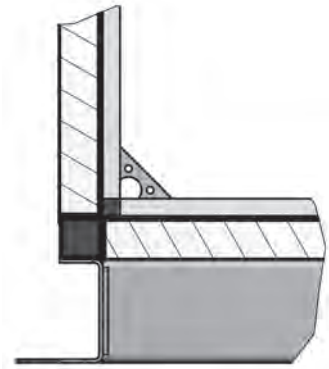

Main frame is made of steel coated with high-duty powder polymeric spattering. Reinforced frame is used for large sections.

Main frame has lift openings.

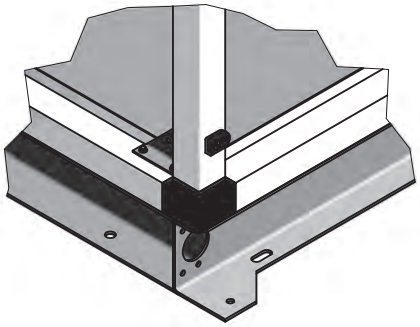

Galvanized painted cover fastened to the module supporting frame is used for outdoor installation. Cover dimensions exceed module dimensions by 30mm from each side. Angles are smoothed-out and covered with plastic inserts.

Separate modules cover joints are covered with U-shaped protective enclosures providing water and dust resistance.

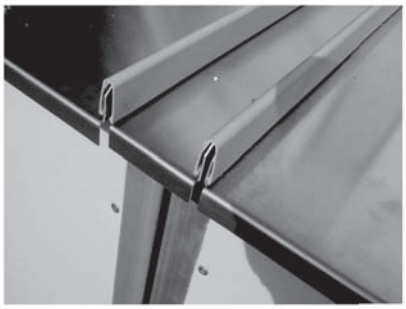

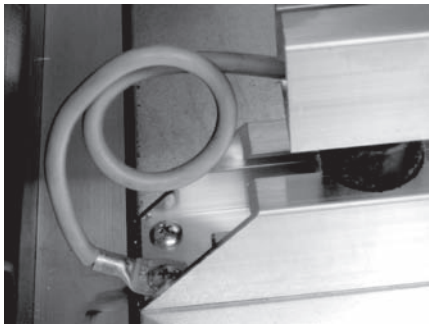

Equipment is fitted with protective devices in accordance with safety regulations.

- Safety loop (grounding) is provided on access doors to all fan sections.
- Copper cable is used for grounding between fan frame and plant frame.
- All sections are grounded against each other.

Supplementary sections of outdoor mounted modules, which are to be installed next to the plant as a matter of module maintenance convenience, are optionally available.

Supplementary section depth depends on heat exchanger headers diameter and extra space for pilot-operated valves.

Supplementary section is made of the same material as central air-conditioner.

All inspection doors are mounted on 2 or 3 hinges and completed with 1-3 handles depending on the door height.

Doors may be equipped with double inspection windows and lights at additional order.

Sections with air valves (inlet, mixing, outlet, etc.) may be fabricated with any number and position of valves. Valves of various types are available.

Valves

Standard valves are made of aluminum with nylon mechanical gears. Levers instead of nylon mechanical gears are available to the customer at additional request. Valves are supplied with expanded shaft for using with valve electric drive or manual drive (at additional order).

Flexible Inserts

Flexible inserts may be installed at the module inlet and outlet to avoid vibration transmission. Inserts consist of two galvanized steel flanged frames with damping insert between them. Inserts are fitted with grounding wire for potentials equalizing.

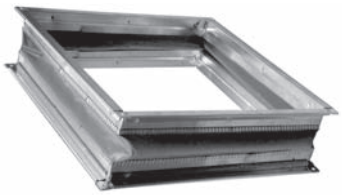

Protective Canopy

Optionally fresh air intake sections may be equipped with a canopy with safety mesh.

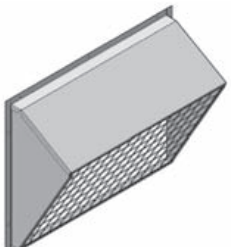

Filtering section may be completed with different types of filters providing required filtering degree and meeting all necessary requirements.

Average Efficiency Panel Filters

Synthetic filters for coarse particles are equipped with galvanized steel frame with double supporting welded mesh and plaited synthetic fibre in the core. Washable.
Class: G3 and G4
Mounting: on guiding rails.
Removal: from the service side.

Metal filters for coarse particles are equipped with galvanized steel frame and reinforced with aluminum wire. Washable.
Class: G1
Mounting: on guiding rails.
Removal: from the service side.

Average Efficiency Pocket Filters

Synthetic pocket filters on a galvanized steel frame.
Class: G4.
Mounting: on guiding rails.
Removal: from the service side.

High Efficiency Pocket Filters

High efficiency pocket filters are equipped with galvanized steel frame; the core is made of synthetic fiber.
Class: F7, F8, F9.
Mounting: on guiding rails.
Removal: from the service side.

Rigid High Efficiency Pocket Filters

High efficiency.

Rigid pocket filters are designed for fine dust. Filters are equipped with plastic frame; the core is made of fiberglass paper with thermoplastic planks; frame is fitted with rubber packing.
Class: F7, F8, F9.
Mounting: on guiding rails.
Removal: from the service side.

The plant may be completed with special filters with higher filtering degree at the special request.

General Information

Central air-conditioners use ribbed heat exchangers.

Each heat exchanger is mounted in sections on guide rails. As a matter of service convenience heat exchanger has removable side panel.

Heat exchangers are supplied completed with manifolds for condensate disposal and air bleeding.

Heat exchangers (heating) are designed for the following maximum heating water parameters:

Coolant parameters:

- Maximum coolant temperature: 180°C
- Working pressure: 1.2 mPa
- Maximum allowable excess pressure: 1.8 mPa for water-type models, and 3.2 mPa for Freon-type models
- Recommended velocity range for energy carrier in the pipe: 0.4 m/s to 1.75 m/s
- Recommended air velocity: up to 3.5 m/s.

Water-to-air and freon heat exchangers (cooling) are equipped with tray for condensate discharge to the sewage.

Electric heat exchangers are designed for inside temperature of up to 950°C.

Electric heat exchangers are equipped with safety thermostat.

Surface Humidifiers

Humidification sections may be completed with two types of surface humidifiers: flowing water humidifiers and humidifiers with recirculation pump. Humidifier's cartridge is made of treated pulp and has a thickness of 100, 200 or 300 mm.

Drain pans collecting condensate are made of stainless steel. Drain connection diameter is 1''. Liquid connections diameter is 1/2''.

In case of frontal velocity exceeding 2.5 m/s drop catcher is required.

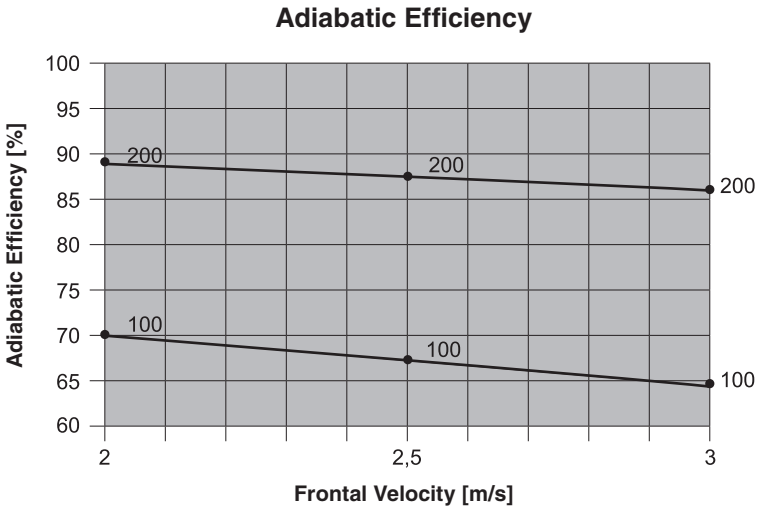

(A) Recirculation water surface humidifiers are supplied with a pump and a bypass valve. Drain pan, pump pocket, stainless steel filter, float valve for water inlet, thread connections for water inlet and drainage are also included. Combination of pan and pocket allows reducing quantity of water drained to the pan. Pump begins flushing water since the moment when the pan is practically empty. Thus, salt content in water is reducing and periodical change of water is provided.

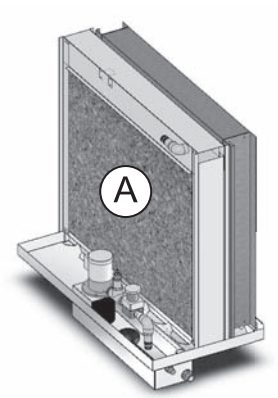

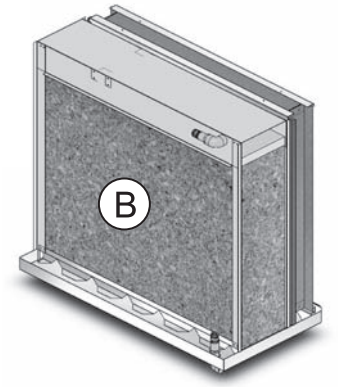

(B) Flowing water surface humidifiers are similar to recirculation water surface humidifiers. Specifically they have the same liquid connections and pulp cartridge. But flowing water humidifiers are supplied without adjusting valves or any other control equipment.

Steam Humidifiers

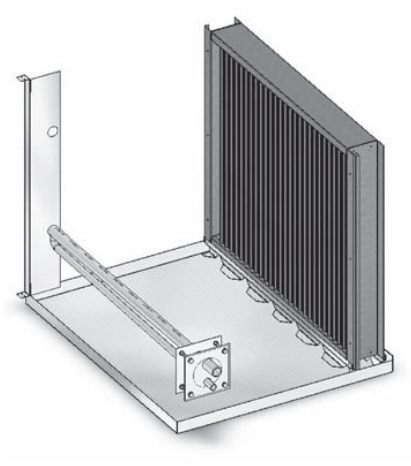

There several solutions for steam humidification sections:

- Only steam distribution collector connected to steam line. In such a case adjusting valve is required (not included in standard specification).
- Steam distribution collector and immersed electrode humidifier.

Steam generation plant is mounted separately, next to the central air-conditioner in a place most suitable for installation. Steam generation plant and collector are connected by means of steam line, included in the standard specification. Steam generation plant is completed with electronic control group. The plant can receive 0-10V or 4-20mA control signals from remote control panel (not included in standard specification).

Drain pans for condensate collecting are made of stainless steel. They are mounted with 4° inclination providing complete liquid drainage through the drain connection. Drain connection diameter is 1''.

In case of frontal velocity exceeding 2.5 m/s drop catcher is required.

Immersed Electrode Humidifiers

Steam Flow Rate	Power	Supply Voltage		
kg/hour	kW	V	Phase	Frequency
1.5	1.12	230	1	50
3	2.25	400	3	50
5	3.75	400	3	50
8	6	400	3	50
10	7.5	400	3	50
15	11.25	400	3	50
25	18.75	400	3	50
35	26.25	400	3	50
45	33.75	400	3	50
65	48.75	400	3	50
90	67.5	400	3	50
130	97.5	400	3	50

Spray Chamber

Spray chambers are supplied against the following specification:

- Housing with double walls (made of stainless steel)
- Stainless steel tray
- Two spray ramps with nozzles connected with pump outside the plant
- Water level in a tray is maintained by means of ball float valve
- Pump
- Stainless steel filter at the pump inlet
- Flow leveler at the section inlet
- Drop catcher at the section outlet.

Rotary recuperator

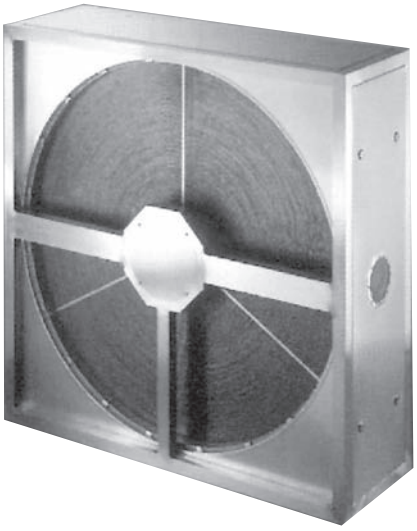

Rotary recuperator has the highest efficiency comparing with recuperators of other types. Heat is collected from exhaust air and transferred to the cold incoming air through the drum. Recuperation efficiency may reach herewith 75%. Recuperator consists of housing, drum, partition wall, driving belt and electric motor rotating drum at a constant or variable speed depending on requirements. The drum consists of alternating flat and corrugated aluminum plates forming multiple channels parallel to the rotor axis. Latent heat represented by humidity condensed in the discharged air flow is transferred simultaneously with sensible heat transfer. Drum plates may be made of water-absorbing as well as nonhygroscopic material. Maximum efficiency may be reached by means of installation of filters for both air flows. Fan location with respect to the recuperator shall be selected correctly for the purpose of system optimal operation. Percentage of exhaust air ingress to the intake zone may be reduced using blow-off sector cleaning impeller from exhaust air stains before returning to the intake zone.

Maximum Self-Cleaning Level

Fans shall be positioned as demonstrated in Figures A or B (see below). It shall be noted than in case of positioning A there is a possibility of negative pressure in a room during cold season. Such fans allocation is the most common. Pressure may be reduced by means of installation of adjusting valve in exhaust duct before recuperator. If return air is polluted, and air recirculation is contraindicative, then it is required to sustain pressure balance on both recuperator sides. Pressure conditions: (p1 > p4)-(p2 > p3).

Maximum Efficiency during Summer Season

In case of fan positioning B, all heat from the motor and fan and from supply air will be dissipated in the exhaust air flow. Such installation option maintains constant pressure in a room throughout the whole year. Cooling energy transfer maximum effect is reached, when the fans are installed in such a way that exhaust air heat and heat generated by fan motors are removed by return air. This configuration is applicable in case, when fresh air is required. In case of fan positioning C may cause certain problems during balancing of air pressure in a room.

Maximum Efficiency during Winter Season

If the fans are installed as shown on the Figure D, then all the heat from the exhaust fan motor and almost all heat from supply fan motor will be utilized. This type of installation maintains constant pressure in a room throughout the whole year. Maximum cooling energy transfer is reached, when the fans are installed in such a way that exhaust air heat or heat generated by fan motors is recovered by means of fresh air. In case of implementation of this configuration exhaust air flowing over to supply air is inevitable.

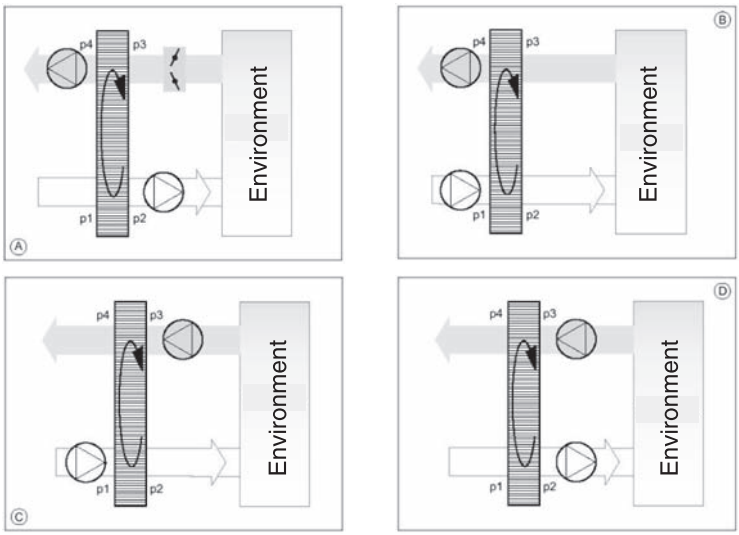

Plate Recuperator

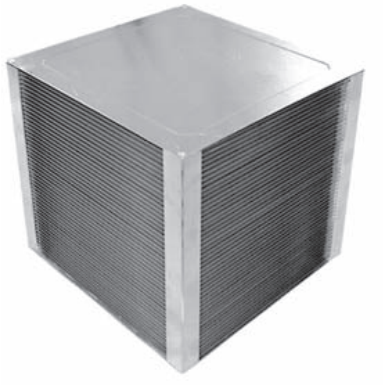

Cross-flow plate recuperators are supplied in the following configurations:

- Exhaust part is at the top, and supply part is at the bottom («one above the other»);
- Exhaust and supply parts are placed in line.

Recuperator plates are made of aluminum or aluminum and zinc alloy. In case of recuperator implementation in facilities with aggressive environment, the plates are made of aluminum coated with epoxy resin-based paint. Other corrosion preventive measures are also put in place. Other components may be inserted after recuperator as well. Unlike the others such configuration does not require filter on supply side

- Exhaust and supply parts of the plant are located next to each other.

Stainless steel drain pan is located in the bottom part of the section. Drain connection diameter is 1''.

Plate recuperator section may be equipped with one or two (if required) bypass valves.

Recirculation Valve may also be installed in the section.

Recuperator with Intermediate Heat Exchanger

Thus system consists of two heat exchangers (air-to-fluid); one heat exchanger operates in exhaust air flow; another heat exchanger operates in supply air flow. Both exchangers are connected to the closed circuit.

Supply heat exchanger provides air pre-cooling air in summer and air pre-heating on winter. Exhaust heat exchanger is used for liquid (usually mixture of water and glycol) temperature changing in the closed circuit: liquid cooling in summer and heating on winter. Glycol heat recovery unit recuperation efficiency is approximately 30-40% at the normal conditions and upon equal flow rates of supply and exhaust air. Usually glycol heat exchangers have 6-8 rows. The system shall be completed with additional liquid carrying lines, circulation pump, expansion tank (not included in standard specification), and valves, if required.

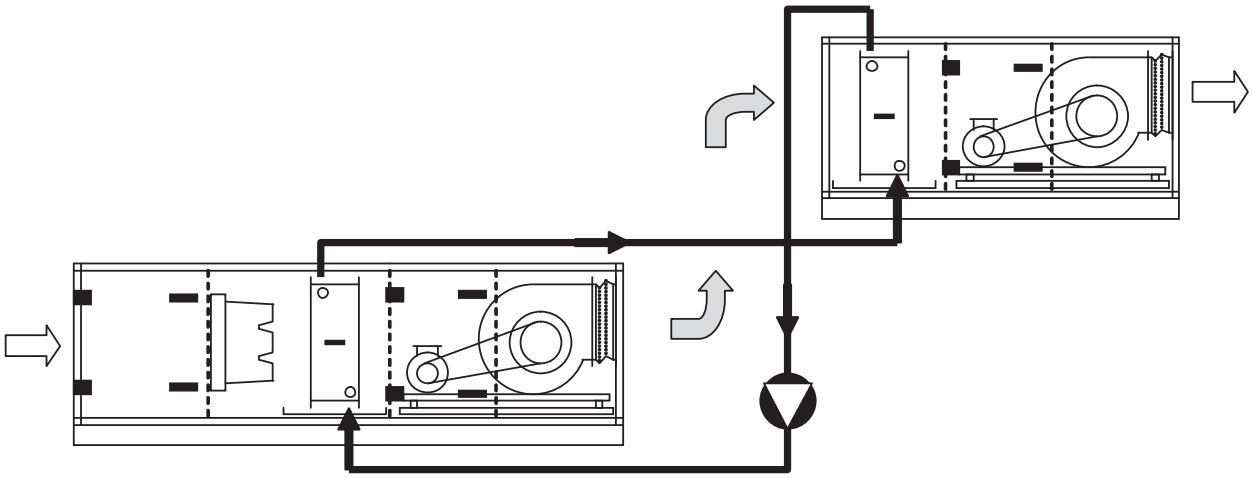

Fan sections are completed with the following components:

- Fan
- Electric motor
- Main frame with antivibration mounts
- Flexible inserts at the fan outlet
- Fan and motor grounding cable

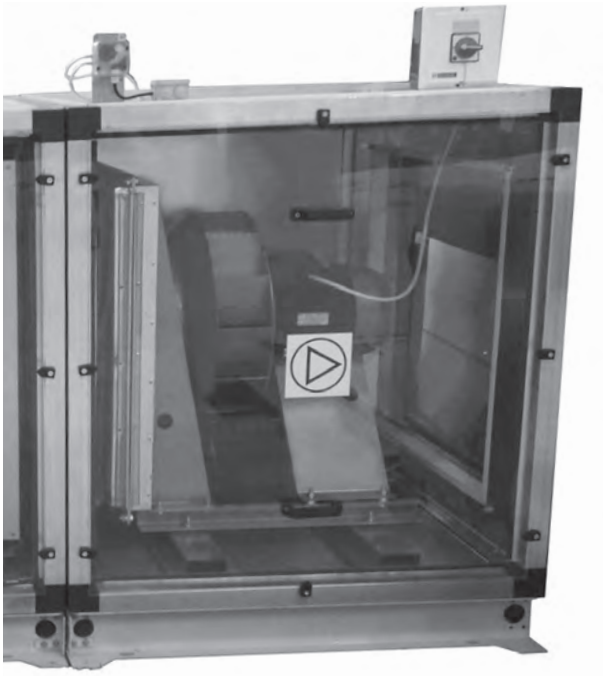

Fans

V-belt transmission is not required for directly driven fan, since motor and fan have one common spindle.

There is also an option of stand-by fan and stand-by motor installation. Inlet and outlet of both fans shall be fitted with air valves as well as partition wall between fan sections (to provide operation of one fan during repair of the other fan).




Electric Motors

Standard electric motors may be supplied in the following configurations:

- three-phase induction motor;
- closed structure with external fan
- squirrel-cage rotor
- B3-type layshaft
- IP55 protection index, insulation class F.

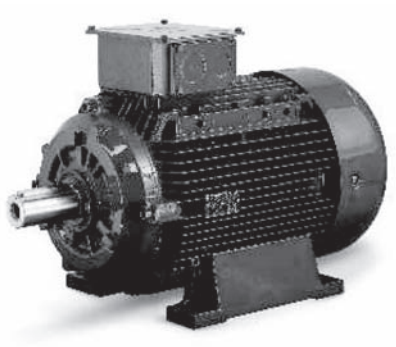

Motor may be supplied with the following features:

- Integrated invertor
- Single-phase
- Thermoresistant
- Thermal protection
- Equipped with heating element.

Antivibration Mounts

Fans are equipped with antivibration mounts.

Silencers

Silencers are available in 4 lengths: 500, 1000, 1500, and 2000 mm.

Noise suppressing plates are made of silicate wool with thermoresistant rubber packing and dust and moisture repelling coating.

Module Codes

Notation	Name
ККЦМ **–10	Forward exhaust fan block
ККЦМ **–10U	Overhead exhaust fan block
ККЦМ **–10L	Left exhaust fan block
ККЦМ **–10R	Right exhaust fan block
ККЦМ **–10B	Back exhaust fan block
ККЦМ **–15	Stand-by side fan block
ККЦМ **–18	Stand-by top fan block
ККЦМ **–20	Water-type air heater
ККЦМ **–25	Electric air heater
ККЦМ **–30	Water-type air cooler+drop catcher+tray
ККЦМ **–35	Freon-type air cooler+drop catcher+tray
ККЦМ **–40	Spray chamber
ККЦМ **–45	Wet deck humidifiers
ККЦМ **–48	Steam humidifiers
ККЦМ **–50	Entering section with valve (F, L, R, U, D). Manual or electric drive (see Notes 1)
ККЦМ **–55	Intermediate chamber unit
ККЦМ **–56	Horizontal standby chamber
ККЦМ **–57	Vertical standby chamber
ККЦМ **–58	Exit chamber
ККЦМ **–60	General filter zone
ККЦМ **–65	Bag filter block
ККЦМ **–68	Panel filter block
ККЦМ **–70	Run around coils
ККЦМ **–75	Plate coil block
ККЦМ **–78	Rotor coil block
ККЦМ **–81	Noise attenuator – 500 mm
ККЦМ **–82	Noise attenuator – 1,000 mm
ККЦМ **–83	Noise attenuator – 1,500 mm
ККЦМ **–84	Noise attenuator – 2,000 mm
ККЦМ **–90	Panel with valve and flexible duct

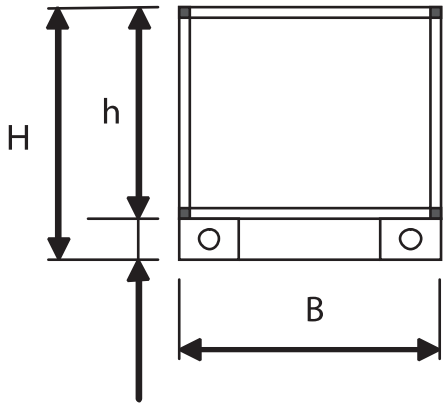

Mounting dimensions see on p.85.

Note:
1) Valve heating is described in Automation chapter.
2) Operation side: R – right, L – left.
3) Valve actuators are described in Automation chapter.

In special cases operation side may be located on top or bottom (U and D correspondingly).

Module Dimensions

Type	ККЦМ **–10 ККЦМ **–15 ККЦМ **–18	ККЦМ **–20 ККЦМ **–25 ККЦМ **–28	ККЦМ **–30 ККЦМ **–35	ККЦМ **–40	ККЦМ **–45	ККЦМ **–48	ККЦМ **–50	ККЦМ **–55 ККЦМ **–56 ККЦМ **–57	ККЦМ **–58	ККЦМ **–60	ККЦМ **–65	ККЦМ **–68	ККЦМ **–70	ККЦМ **–75	ККЦМ **–78	ККЦМ **–81	ККЦМ **–82	ККЦМ **–83	ККЦМ **–84	ККЦМ **–90
	T [mm]	I [mm]	G [mm]	K [mm]	M [mm]	P [mm]	A [mm]	A [mm]	A [mm]	E [mm]	D [mm]	C [mm]	V [mm]	V [mm]	S [mm]	R [mm]	R [mm]	R [mm]	R [mm]	130 [mm]
ККЦМ3,2-	**800**	350	600	1100	1100	1100	400	600	600	650	650	300	750	1000	600	600	1100	1500	2000	125
ККЦМ5-	**800**																			
ККЦМ8-	**800**																			
ККЦМ10-	**1100**						600													
ККЦМ13-	**1400**																			
ККЦМ16-	**1900**		700											1500						
ККЦМ20-	**2000**																			
ККЦМ25-	**2200**																			
ККЦМ32-	**2200**			1600		1600	1100							Индивидуально						
ККЦМ38-	**2200**																			
ККЦМ45-	**2800**	400	750									350	850							
ККЦМ56-	**2800**																			
ККЦМ63-	**2800**			2000	1300	2000														
ККЦМ80-	**3500**																			
ККЦМ100-	**3500**																			

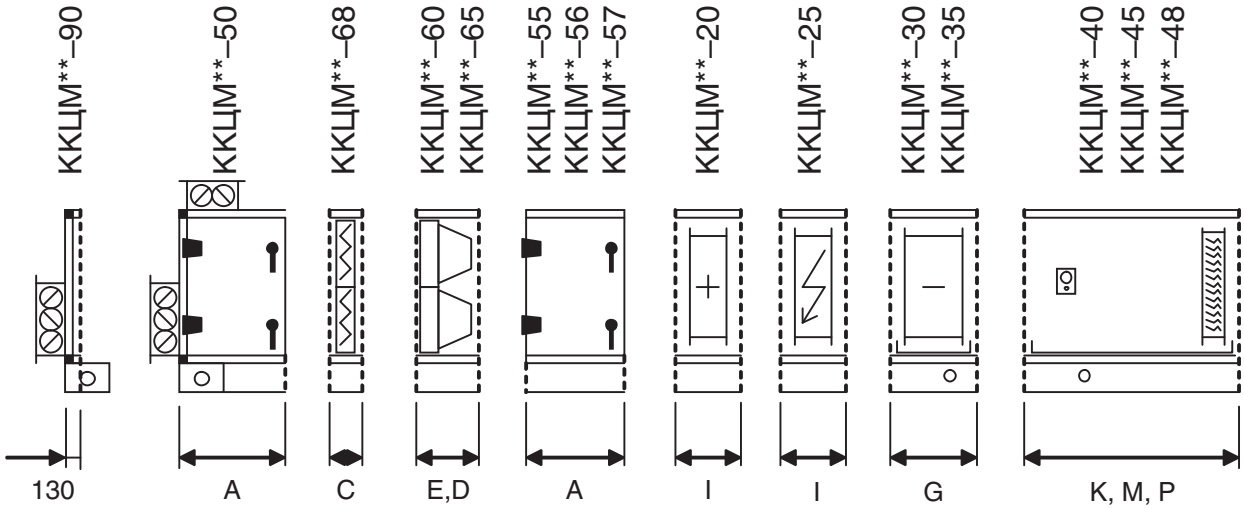

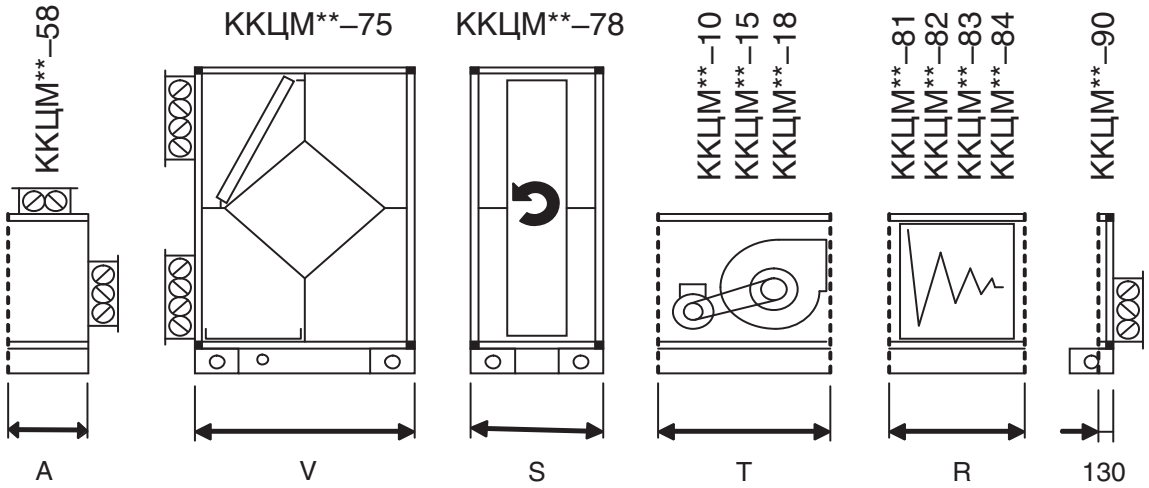

Example:
ККЦМ(KKTsM)25R-50FU-60-20-30-10-55-82-58B

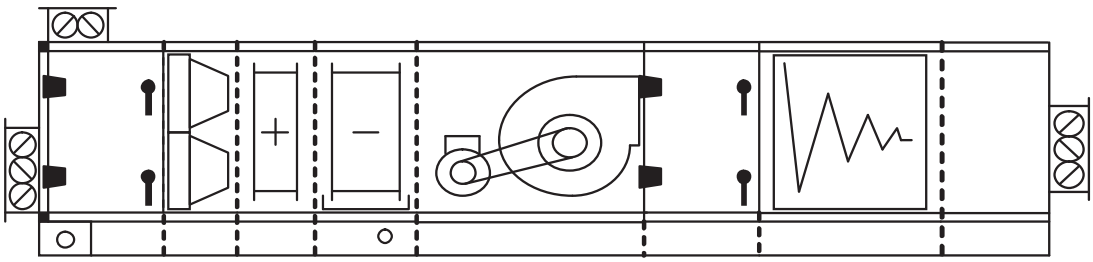

HEAT EXCHANGERS

www.cvm.ru

Manufactured in accordance with TU 4863-026-64600223-12

CVM Manufacturing Works matured the production of high efficiency copper-aluminum plate heat exchangers intended for air heating and cooling. Heat exchangers can be used in the equipment of hot-air heating, ventilation and air conditioning systems, and also can be included as a part of process equipment.

Heat exchangers represent a bundle of copper pipes of 9.52 mm or 12.0 mm diameter arranged in staggered order. Plates (lamellae) of aluminum foil are pressed onto pipes as finning. The minimum pitch between plates is 1.8 mm. The maximum one depends on pipe diameter and heat exchanger application.

Heat exchangers are designated for operation under O1 climatic conditions in accordance with GOST 15150-69.

It is allowed to use water air heaters and air coolers at coolant temperature of up to 180 °C and operating pressure of up to 1.2 MPa. The maximum permissible excessive pressure is 1.8 MPa. The recommended range of heat transfer agent rates in pipes is 0.4 to 1.75 m/sec. As heat transfer agent heating water, steam, as well as non-freezing fluids (water solution of ethylene glycol or propylene glycol) can be used. As a coolant chilled water or water solutions of ethylene glycol and propylene glycol can be used.

To avoid heat exchanger clogging it is desirable to pre-clean the heated air. It shall not contain solid, fiber, adhesive matters or aluminum, copper and zinc aggressive admixtures that may cause corrosion of heat exchanger elements. The dust content of the air shall not content 0.5 mg/m^3.

Heat exchangers are denoted as follows:

BBH9-900-500-2-2,5-4-1

- Heat exchanger version:
  1 – left-side version, direct flow;
  2 – right-side version, direct flow;
  3 – left-side version, back flow;
  4 – right-side version, back flow;
- Number of heat exchanger passages composing loop;
- Distance between aluminum finning plates (lamellae pitch) in mm;
- Number of copper pipe rows (1 to 12);
- Finned pipe height (height of heat exchanger grid) in mm;
- Length of copper pipe finned part (lamellae set length) in mm;
- Copper pipe outer diameter (Ø9.52mm or Ø12.0mm);
- **BBH** – water air heater;
  ПВН – steam air heater;
  BBO – water air cooler;
  ФВО – freon air cooler (evaporator);
  ФВН – freon condenser.

Heat Exchanger

Heat Exchanger Type	Heat Exchanger Designation	Pipe D [mm]	Number of Rows	Plate pitch [mm]	Minimum dimensions [mm]	
					xxx_{max}	yyy_{min}
Water air heater	BBH	9,52	1…4	1,8…4,0	200	100
		12		1,8…4,0	400	150
Steam air heater	ПВН	9,52	1…3	1,8…3,0	450	400
		12		1,8…3,0		
Water air cooler	BBO	9,52	2…12	2,5…6,5	400	200
		12		2,5…8,0	400	200
Freon air cooler (evaporator)	ФВО	9,52	3…12	2,5…6,5	400	200
		12		2,5….8,0	500	200
Freon condenser	ФВН	9,52	3…6	2,0…3,0	500	300
		12		2,0…3,0		

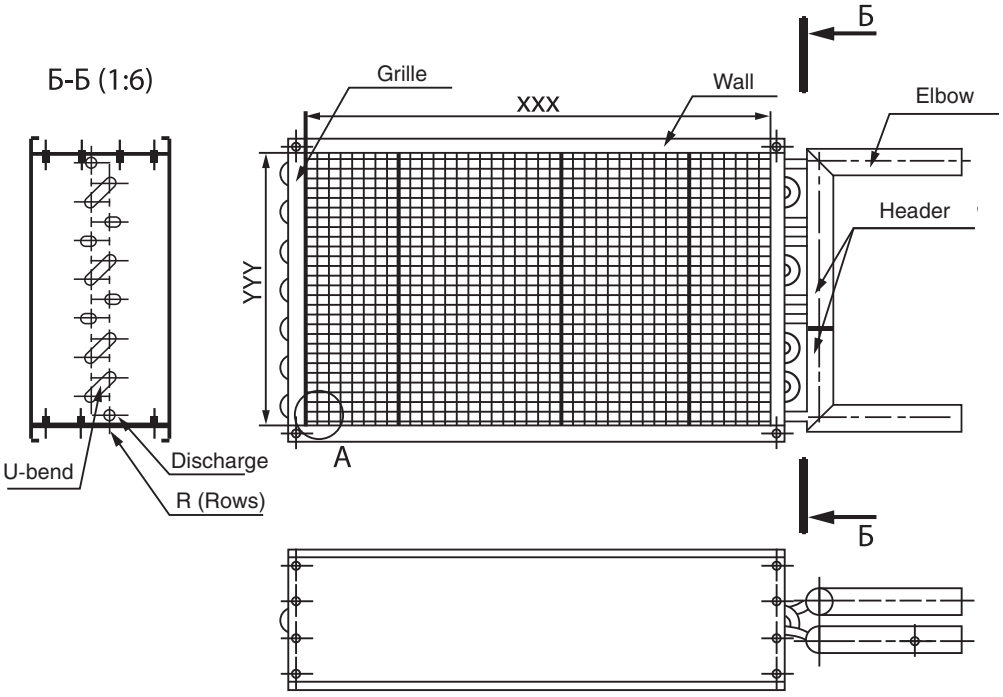

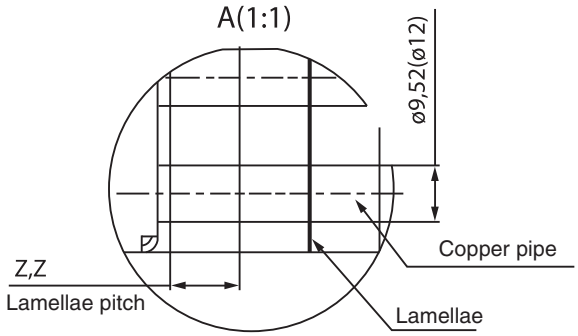

Specification

Maximum dimensions [mm]		Air Handling Capacity [m³/hour]		Heat Producing Capability [kW]		Refrigerating Capacity [kW]	
xxx_{max}	yyy_{max}	L_{min}	L_{max}	$Q_{T\,min}$	$Q_{T\,max}$	$Q_{x\,min}$	$Q_{x\,max}$
2000	1500	150	45000	3,5	1600	—	—
3000	2000	600	82000				
1900	2000	1300	57000	16	1400	—	—
2000	1500	650	45000	—	—	3,5	700
3000	2000	650	82000				
2000	1500	650	45000	—	—	5,2	700
3000	2000	750	82000				
3000	2000	1200	82000	7	300	—	—

Order form for manufacturing of heat exchanger see on p.208.

www.cvm.ru

DRY COOLER

Manufactured in accordance with TU 4864-027-64600223-13

Dry Cooler is an extended surface heat exchanger equipped with fans cooling coolant. Coolant is cooled by air flow supplied by fans. Dry cooler is designed for outdoor installation. Water or water-glycol solution is used as a coolant.

Dry coolers are denoted as follows:

ГРАС n B. XXX x YYY. D.N.M.P.1.1 (Q) - УУУ

- УУУ – Climatic version;
- Q – Power (rated);
- 1 – Design variant: 1 – standard; 2 – reversal;
- 1 – Operating position: 1 – vertically, 2 – horizontally, 3 – v-shaped;
- P – Number of heat exchanger tube ways: 2, 4, 6, 8, 10, 12, 14, 16, or 18;
- M – Number of heat exchanger tube rows: 3, 4, 6, 8, 10, or 12;
- N – Number of fans per section: 1, 2, 3, 4, 6;
- D – Fan diameter;
- YYY – Front opening width;
- XXX – Front opening length;
- B – Explosion-proof enclosure;
- n – Number of heat-exchanging sections;
- ГРАС – Series.

Example of reference designation:

«ГРАС1.1000x1600.63.2.4.4.4.2.1(52)-У1 ТУ4864-027-64600223-13»

One section; opening size: 1000x1600; fan diameter: 630mm; x2 fans; x4 rows; x4ways; horizontal version; standard design; power: 52kW; climatic version: У1.

Character “B” is added to the reference designation after the first digit in case of explosion-proof enclosure.

Example of explosion-proof ГРАС (GRAS) reference designation:

«ГРАС1B.1000x1600.63.2.4.4.4.2.1(52)-У1 ТУ4864-027-64600223-13»

Character “K” is added to the reference designation after the first digit in case of corrosion-proof version.

Example of corrosion-proof ГРАС (GRAS) reference designation:

«ГРАС1K.1000x1600.63.2.4.4.4.2.1(52)-У1 ТУ4864-027-64600223-13»

Advantages

Dry cooler implementation has a variety of advantages:

- Resource saving (water and energy)
- Low-cost maintenance
- Easy operation in any year season
- Easy to install and operate
- Short return on investment
- Long-term service.

Main Characteristics

Dimensions: 1000x800 to 2000x3000 mm.
Air handling capacity: 6,000 to 200,000 m^3/hour.
Fluid flow rate: up to 12,000 m^3/hour.
Capacity: 10kW to 600kW per section.
Number of fans per section: 1 to 6 (depending on heat-exchanger inlet opening size).
Number of sections is optional.

Dry cooler casing is made of galvanized steel and coated with special polymeric paint. Dry cooler is available in horizontal and vertical versions.

Fan efficiency during cooling of hot and very hot fluids as well as in conditions of air temperature exceeding 40°C may be saved by “Reversal” configuration providing air supply form fan to the heat exchanger. This means that air temperature blowing at the fan does not depend on the heat exchanger temperature. Outward heat transmission is performed through the heat transfer surface of the heat exchanger cooling by air supplied by fans.

Modular structure allows increasing of cooling capacity by means of changing the number of fans mounted in a single case with the heat exchanger of corresponding thermal performance.

Automatic Control System see p.194.

ГРАС (GRAS) Design Types

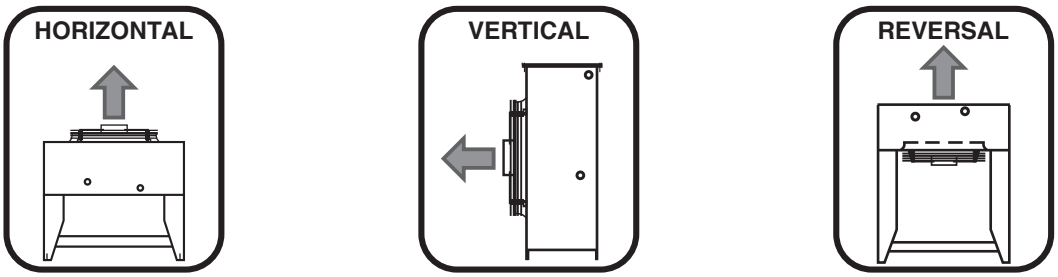

Number of fans: 1 to 6

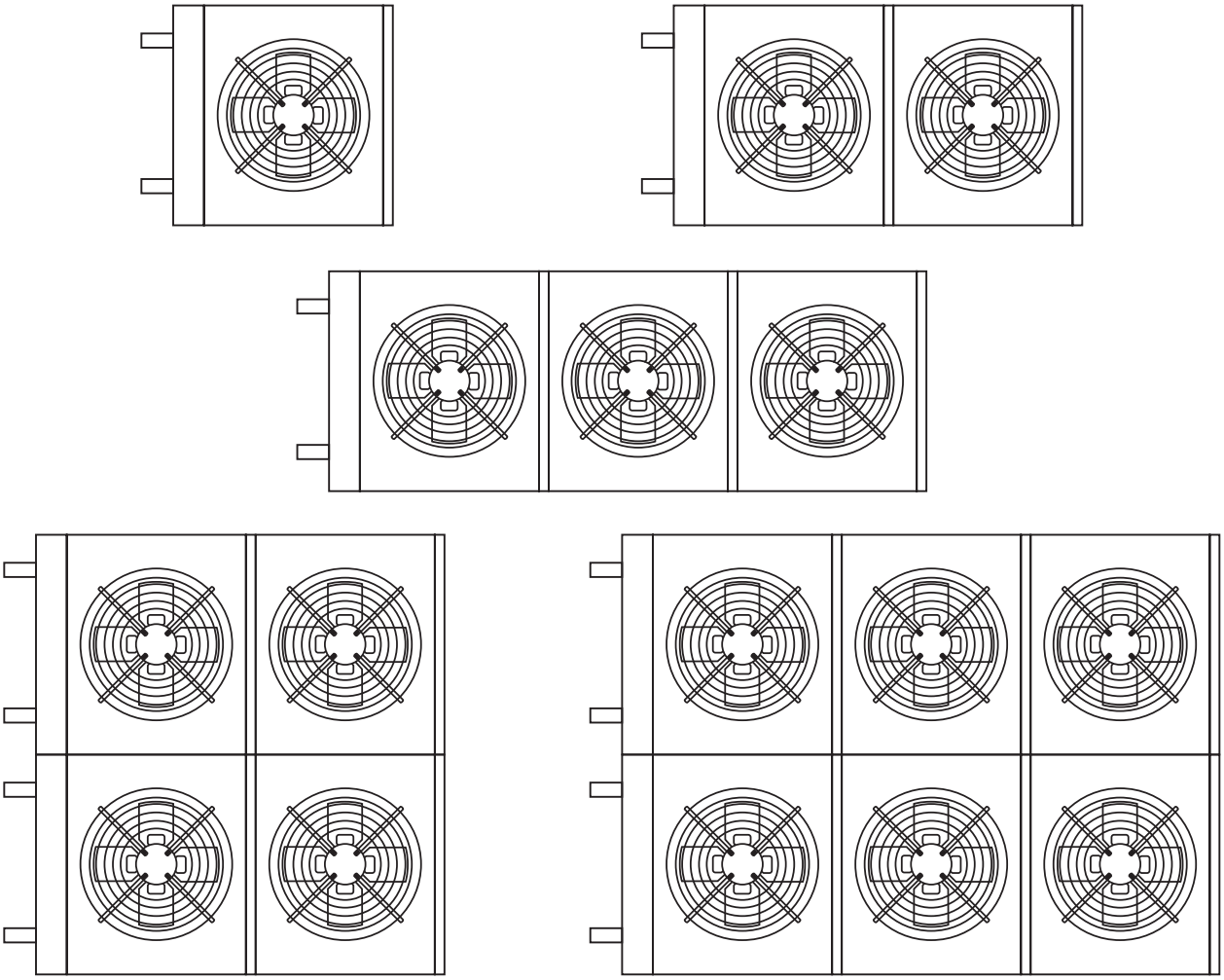

To select (build) dry cooler, please, fill in order form on p.209.

CVM®
www.cvm.ru

SMOKE VENTILATION SYSTEM EQUIPMENT

CVM Manufacturing Works produces 7 lines of smoke exhaust fans: 2 lines of roof radial fans with frontwards and backwards curved impeller blades, 2 lines of radial scroll case fans with frontwards and backwards curved impeller blades, 2 lines of axial and 1 line of wall-mounted radial fans with backwards curved impeller blades. All lines of smoke exhaust fans (radial and axial) successfully passed certification tests demonstrating fireproof during 2 hours at a temperature of 400 °C and 600 °C.

No.	Item Name	Model	Climatic Version and Installation Category	Location
1	Roof fan	ВКРН ДУ	У1	Outdoor pursuant to GOST 15150-69
2	Roof fan	ВКРВ ДУ	У1	
3	Roof fan	ВО-21-210К ДУ	У1	
4	Roof fan	ВЕРС ДУ	У1	
5	Wall-mounted fan	ВРП ДУ	У1, У2	Outdoor pursuant to GOST 15150-69 Outdoor under hood and indoor pursuant to GOST 15150-69
6	Axial fan	ВО-21-210 ДУ	У2	Outdoor under hood and indoor pursuant to GOST 15150-69
7	Radial fan	ВР-80-70 ДУ	У2	
8	Radial fan	ВР-280-46 ДУ	У2	
9	Air pressurization fan	УВОП	У2	
10	Roof air pressurization fan	КВОП	У1	Outdoor pursuant to GOST 15150-69

CVM Manufacturing Works reserves the right to change the design of ventilation equipment as a part of continuous improvement process.

Optionally, climatic versions Т (ТВ, ТМ, ТС), ХЛ (УХЛ) are available.

CVM Manufacturing Works produces the following explosion-proof items against special order:

Smoke exhaust fans ВКРН-В ДУ (VKRN-V DU), ВКРВ-В ДУ (VKRV-V DU), ВРП-В ДУ (VRP-V DU), ВР-280-46 В ДУ (VR-280-46 V DU), ВР-80-70 В ДУ (VR-80-70 V DU), ВО-21-210(К) В ДУ (VO-21-210(K) V DU).

Air pressurization fans УВОП (UVOP) (exceptions see on pp.146-148), and КВОП (KVOP) (exceptions see on pp.153-155).

(See more on page 158).

Explosion-proof feature is denoted by the character “В” (“V”) after the number.

Aerodynamic performance and noise characteristics of explosion-proof fans comply with characteristics of corresponding models with regular enclosure.

All explosion-proof fans are certified by the GOST-R and TR Certification Systems and have permission by the Federal Service for Environmental, Technological and Nuclear Supervision.

Operational Characteristics

Fans performance is defined in accordance with GOST 10921-90 with inlet chamber and fan free outlet. Characteristics are represented by the total or static fan pressure versus air flow rate curves. Dynamic pressure corresponds to flange cross-section at the fan outlet. All fan characteristics correspond to standard atmospheric pressure and air temperature of 20 °C with atmospheric density of 1.2 kg/m^3. For the fan characteristics deration considering removable smoke temperature defined in the smoke exhaustion calculations, the pressure should be multiplied by the factor K=293/(273+T), where T is removable smoke temperature in °C. It is well to bear in mind that power consumed by the fan changes proportionally.

Smoke exhaust fans selection software allows choosing required handled medium temperature and picking up a fan considering stated medium parameters.

Manufacturing plant recommends to blank off 3/4 of fan suction opening during fan break-in prior to mounting (installation of large-sized equipment in hard-to-reach spots), or, in case that the break-in is performed after the equipment mounting, adjust system head so that current consumption during fan break-in does not exceed 10 % of the rated current (specified on the motor rating plate). Stated conditions may be obtained by means of installation of throttling device on suction side. Break-in may be performed at the manufacturing plant.

Optionally, equipment may be completed with mounting sleeves, check valves, trays, fittings, etc. (see “Roof Fans Installation” section on page 159).

Applied electric motors

Degree of protection for the applied electric motors shall not be lower than IP54.

Note:

Read “smoke exhaustion system exhaust fans” and “smoke exhaustion system inlet fans” instead of “smoke exhaust fans” and “air pressurization fans” correspondingly (SP 7.13130.2013 clauses 3.16, 3.17).

Manufactured in accordance with TU 4861-004-64600223-12

2300 – 130000 m³/hour

- ◆ Impeller with backward-curved blades
- ◆ Welded housing with powder paint coating
- ◆ Galvanized steel housing
- ◆ Bilateral emission of removable smoke

Low energy consumption.

Some fans are admitted to operate in the general ventilation mode at the speed decreased by at least 25% against specified in the catalog (for example, using frequency converter). Application capabilities are to be agreed with the manufacturer.

Equipment with dual-speed induction motors (optional).

Capability of compact installation of several fans on a roof.

Exceptional aerodynamic intensity of the “Б”-type impellers.

Version “П” (“P”)

It is recommended to install ЗПД (ZPD) screens set providing weather protection in case of fan mounting in places with strong lateral wind (see p.168).

Explosion-proof version is available.

Fans are denoted as follows:

ВКРН – АП - 3,15 В ДУ 400 - 01 - У1

- У1 – Climatic version;
- 01 – Modification index number;
- 400 – Maximum temperature of the handled medium;
- ДУ – Application code (smoke exhaustion);
- В – Special enclosure type (explosion-proof);
- 3,15 – Impeller diameter in decimeters;
- П – Housing version (П);
- А – Aerodynamic power index (А, Б or В);
- АП – Impeller blades type: Н – Backward-curved blades;
- ВКРН – Fan type (Radial roof fan).

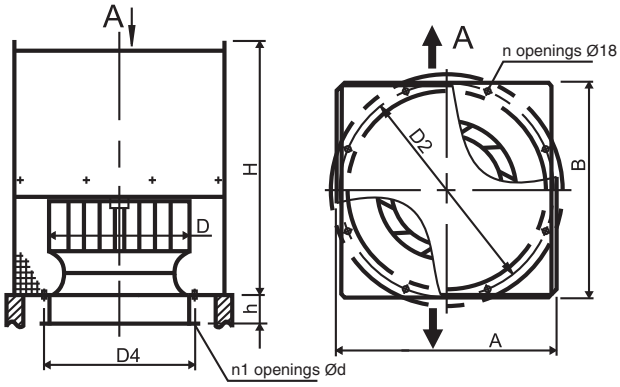

WARNING! ВКРН В ДУ (VKRN V DU, explosion-proof version) is available with “П”-type housing only due to oversized dimensions of explosion-proof motors and impossibility to mount them in the “Д”-type housing.

№	Fan Type	Dimensions [mm]										Weight [kg]
		A	B	D	D2	D4	H	h	d	n	n1	
1	ВКРН-А/Б-3,15ДУ-00	470	470	315	470	345	477/509	100	7	4	4	30,6/33,1
2	ВКРН-А/Б-3,55ДУ-00	560	560	355	585	385	570/610	100	7	4	4	40/43
3	ВКРН-А/Б-4ДУ-00	560	560	400	585	430	565/605	130	7	4	4	58,7/60,7
4	ВКРН-А/Б-4,5ДУ-00	650	650	450	665	480	630/675	130	7	8	5	71/80
5	ВКРН-А/Б-5ДУ-00	755	755	500	772	530	670/720	140	7	8	5	112,3/130
6	ВКРН-А/Б-5,6ДУ-00	755	755	560	772	590	800/855	130	10	8	6	140,2/153
7	ВКРН-А/Б-6,3ДУ-00	780	755	630	772	660	813/910	200	10	8	6	143/167
8	ВКРН-А/Б-6,3ДУ-01	780	755	630	772	660	813/910	200	10	8	6	171/206
9	ВКРН-А/Б-7,1ДУ-00	870	820	710	772	660	1090/1160	160	10	8	6	211/222
10	ВКРН-А/Б/В-7,1ДУ-01	870	820	710	772	660	1090/1160/1090	160	10	8	6	249/304/234
11	ВКРН-А/Б/В-8ДУ-00	1080	1080	800	1072	830	1160/1240/1160	197	10	8	6	281/413/270
12	ВКРН-А/Б-8ДУ-01	1080	1080	800	1072	830	1160/1240	197	10	8	6	305/341
13	ВКРН-А-8ДУ-02	1080	1080	800	1072	830	1160	197	10	8	6	382
14	ВКРН-А/Б-9ДУ-00	1095	1080	900	1072	940	1200/1290	130	10	8	8	330/362
15	ВКРН-А/Б-9ДУ-01	1095	1080	900	1072	940	1200/1290	130	10	8	8	383/400
16	ВКРН-А-9ДУ-02	1095	1080	900	1072	940	1200	130	10	8	8	455
17	ВКРН-А/Б-10ДУ-00	1290	1250	1000	1272	1040	1425/1525	130	10	8	8	419/559
18	ВКРН-А/Б-10ДУ-01	1290	1250	1000	1272	1040	1425/1525	130	10	8	8	445/610
19	ВКРН-А/Б-11,2ДУ-00	1350	1290	1120	1272	1165	1460/1702	190	12	8	9	582/652
20	ВКРН-А/Б/В-11,2ДУ-01	1350	1290	1120	1272	1165	1460/1702/1460	190	12	8	9	737/782/649
21	ВКРН-А/Б/В-12,5ДУ-00	1530	1485	1250	1522	1295	1537/1665/1537	130	12	8	9	667/811/660
22	ВКРН-А/Б-12,5ДУ-01	1530	1485	1250	1522	1295	1537/1665	130	12	8	9	782/911
23	ВКРН-А-12,5ДУ-02	1530	1485	1250	1522	1295	1537	130	12	8	9	1041
24	ВКРН-А/Б-14ДУ-00	1680	1680	1400	1522	1295	1785/1925	130	12	8	9	1001/1051
25	ВКРН-А/Б-14ДУ-01	1680	1680	1400	1522	1295	1785/1925	130	12	8	9	1189/1391

Manufactured in accordance with TU 4861-004-64600223-12

2300 – 130000 m³/hour

- ◆ Impeller with backward-curved blades
- ◆ Welded housing with powder paint coating
- ◆ Galvanized steel housing
- ◆ Bilateral emission of removable smoke

Low energy consumption.

Some fans are admitted to operate in the general ventilation mode at the speed decreased by at least 25% against specified in the catalog (for example, using frequency converter). Application capabilities are to be agreed with the manufacturer.

Equipment with dual-speed induction motors (optional).

Capability of compact installation of several fans on a roof.

Exceptional aerodynamic intensity of the “Б”-type impellers.

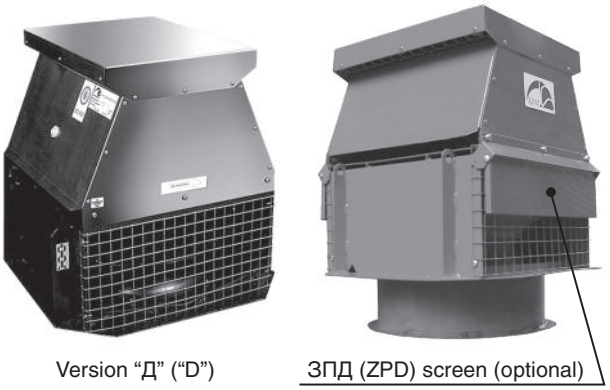

It is recommended to install ЗПД (ZPD) screens set providing weather protection in case of fan mounting in places with strong lateral wind (see p.168).

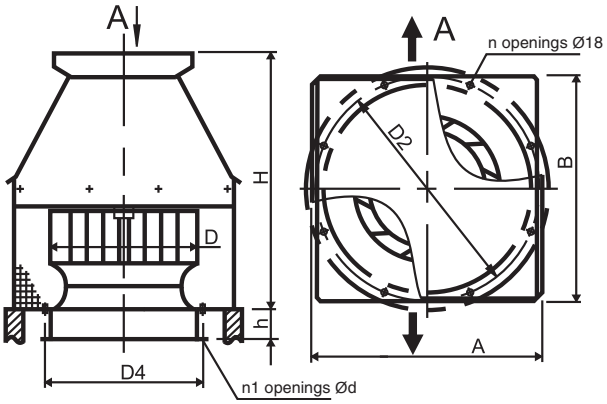

Fans are denoted as follows:

ВКРН - А Д - 3,15 ДУ 400 - 01 - У1

- Climatic version;
- Modification index number;
- Maximum temperature of the handled medium;
- Application code (smoke exhaustion);
- Impeller diameter in decimeters;
- Housing version (Д);
- Aerodynamic power index (А, Б or В);
- Impeller blades type: Н – Backward-curved blades;
- Fan type (Radial roof fan).

WARNING! ВКРН В ДУ (VKRN V DU, explosion-proof version) is available with “П”-type housing only due to oversized dimensions of explosion-proof motors and impossibility to mount them in the “Д”-type housing.

№	Fan Type	Dimensions [mm]										Weight [kg]
		A	B	D	D2	D4	H	h	d	n	n1	
1	ВКРН-А/Б-3,15ДУ-00	470	470	315	470	345	477/509	100	7	4	4	26/28,5
2	ВКРН-А/Б-3,55ДУ-00	560	560	355	585	385	570/610	100	7	4	4	39/42
3	ВКРН-А/Б-4ДУ-00	560	560	400	585	430	565/605	130	7	4	4	50,7/59,7
4	ВКРН-А/Б-4,5ДУ-00	650	650	450	665	480	630/675	130	7	8	5	67/76
5	ВКРН-А/Б-5ДУ-00	755	755	500	772	530	670/720	140	7	8	5	105,9/123,6
6	ВКРН-А/Б-5,6ДУ-00	755	755	560	772	590	800/855	130	10	8	6	132,7/146
7	ВКРН-А/Б-6,3ДУ-00	780	755	630	772	660	813/910	200	10	8	6	131/155
8	ВКРН-А/Б-6,3ДУ-01	780	755	630	772	660	813/910	200	10	8	6	159/194
9	ВКРН-А/Б-7,1ДУ-00	870	820	710	772	660	1090/1160	160	10	8	6	202/213
10	ВКРН-А/Б/В-7,1ДУ-01	870	820	710	772	660	1090/1160/1090	160	10	8	6	240/295/225
11	ВКРН-А/Б/В-8ДУ-00	1080	1080	800	1072	830	1160/1240/1160	197	10	8	6	249/382/240
12	ВКРН-А/Б-8ДУ-01	1080	1080	800	1072	830	1160/1240	197	10	8	6	273/309
13	ВКРН-А-8ДУ-02	1080	1080	800	1072	830	1160	197	10	8	6	350
14	ВКРН-А/Б-9ДУ-00	1095	1080	900	1072	940	1200/1290	130	10	8	8	311/343
15	ВКРН-А/Б-9ДУ-01	1095	1080	900	1072	940	1200/1290	130	10	8	8	364/406
16	ВКРН-А-9ДУ-02	1095	1080	900	1072	940	1200	130	10	8	8	435
17	ВКРН-А/Б-10ДУ-00	1290	1250	1000	1272	1040	1425/1525	130	10	8	8	413/553
18	ВКРН-А/Б-10ДУ-01	1290	1250	1000	1272	1040	1425/1525	130	10	8	8	438/604
19	ВКРН-А/Б-11,2ДУ-00	1350	1290	1120	1272	1165	1460/1702	190	12	8	9	549/619
20	ВКРН-А/Б/В-11,2ДУ-01	1350	1290	1120	1272	1165	1460/1702/1460	190	12	8	9	704/749/616
21	ВКРН-А/Б/В-12,5ДУ-00	1530	1485	1250	1522	1295	1537/1665/1537	130	12	8	9	605/777/600
22	ВКРН-А/Б-12,5ДУ-01	1530	1485	1250	1522	1295	1537/1665	130	12	8	9	720/877
23	ВКРН-А-12,5ДУ-02	1530	1485	1250	1522	1295	1537	130	12	8	9	971
24	ВКРН-А/Б-14ДУ-00	1680	1680	1400	1522	1295	1785/1925	130	12	8	9	960/1010
25	ВКРН-А/Б-14ДУ-01	1680	1680	1400	1522	1295	1785/1925	130	12	8	9	1148/1350

CHARACTERISTICS SUMMARY DIAGRAM

2300 – 44000 m³/hour

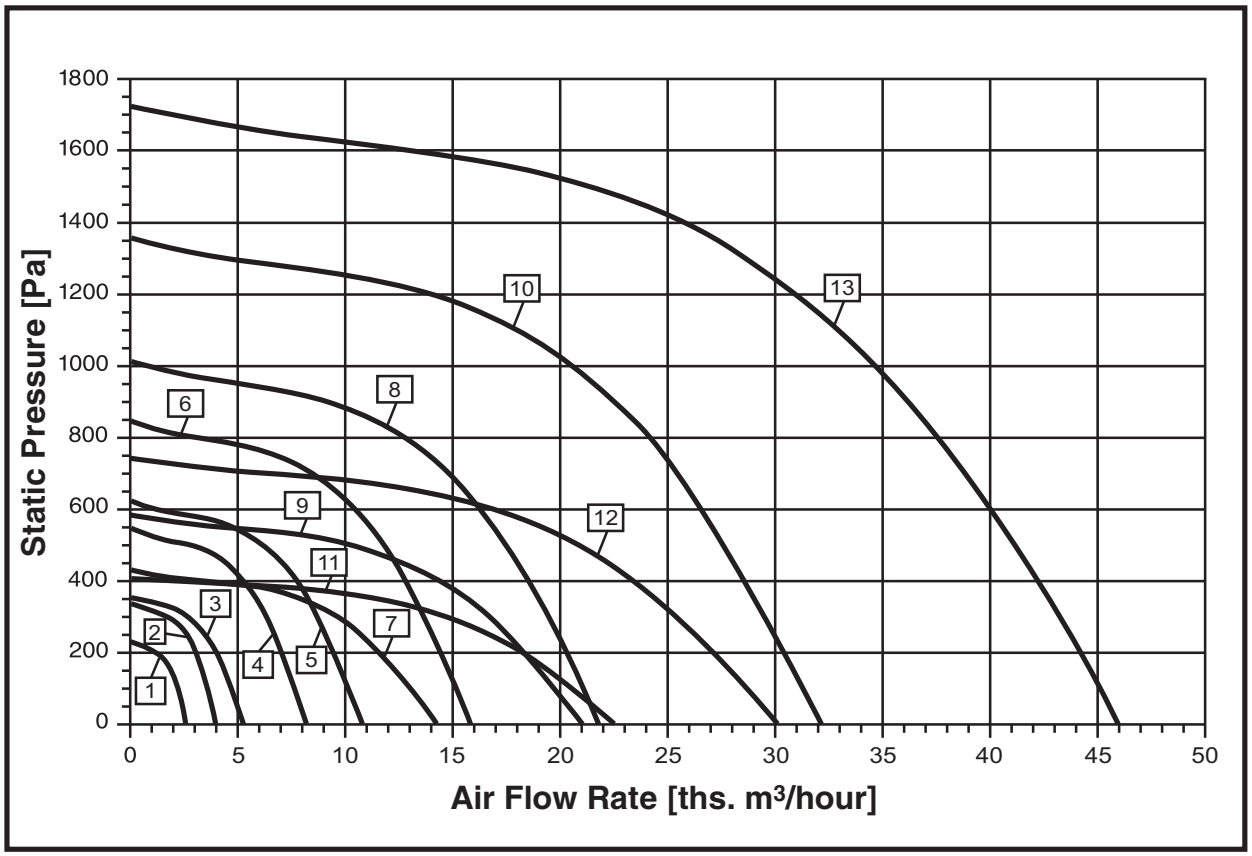

№	Fan Type	Electric Motor Type	Frequency n [min^{-1}]	Power N_y [kW]
1	ВКРН-АП/АД-3,15ДУ-00	АИР56В4	1350	0,18
2	ВКРН-АП/АД-3,55ДУ-00	АИР63В4	1450	0,37
3	ВКРН-АП/АД-4ДУ-00	АИР71А4	1320	0,55
4	ВКРН-АП/АД-4,5ДУ-00	АИР80А4	1450	1,1
5	ВКРН-АП/АД-5ДУ-00	АИР80В4	1395	1,5
6	ВКРН-АП/АД-5,6ДУ-00	АИР100S4	1450	3
7	ВКРН-АП/АД-6,3ДУ-00	АИР90L6	920	1,5
8	ВКРН-АП/АД-6,3ДУ-01	АИР112М4	1410	5,5
9	ВКРН-АП/АД-7,1ДУ-00	АИР112МА6	950	3
10	ВКРН-АП/АД-7,1ДУ-01	АИР132М4	1450	11
11	ВКРН-АП/АД-8ДУ-00	АИР112МА8	710	2,2
12	ВКРН-АП/АД-8ДУ-01	АИР132S6	950	5,5
13	ВКРН-АП/АД-8ДУ-02	АИР160S4	1450	15
	ВКРН-АП/АД-8ДУ-03	АИР160М4	1450	18,5

CHARACTERISTICS SUMMARY DIAGRAM

2300 – 116000 m³/hour

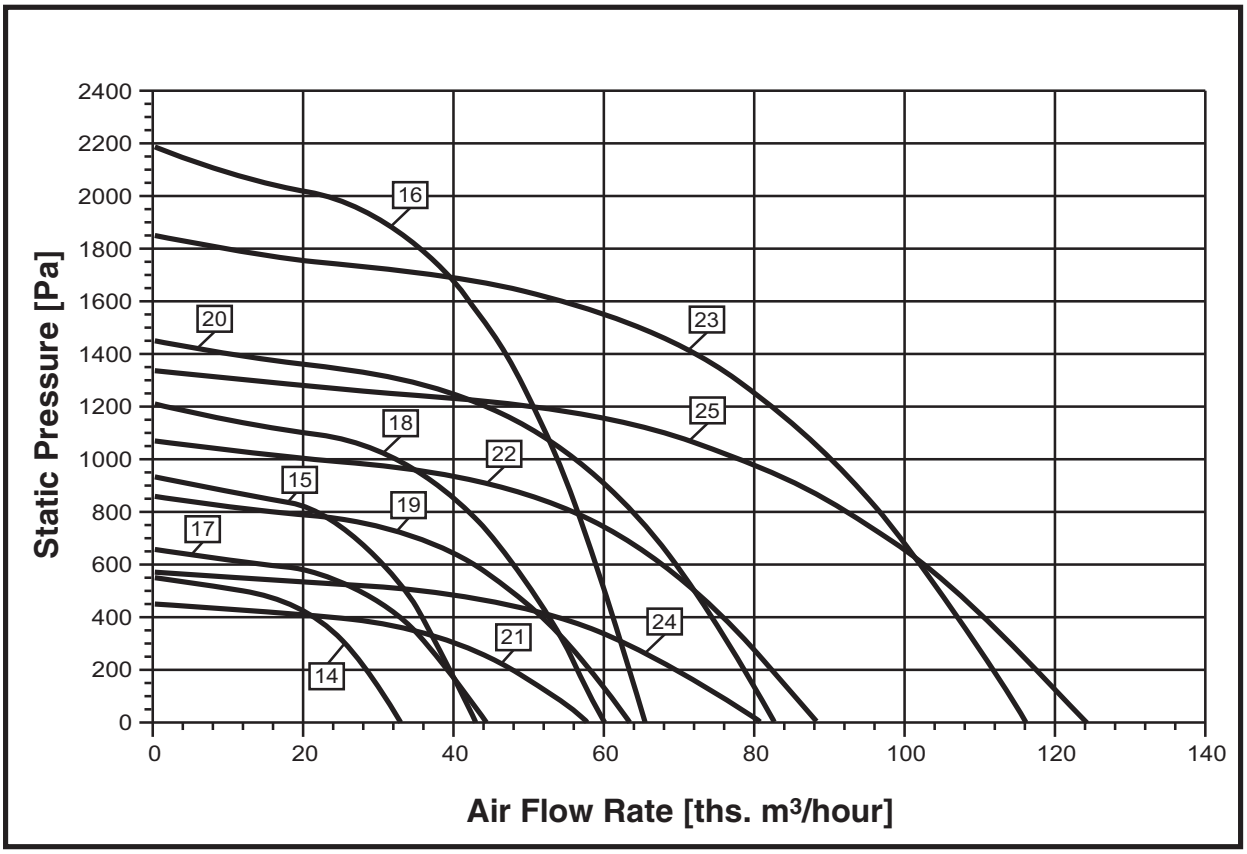

№	Fan Type	Electric Motor Type	Frequency n [min-1]	Power N_y [kW]
14	ВКРН-АП/АД-9ДУ-00	АИР132S8	730	4
15	ВКРН-АП/АД-9ДУ-01	АИР160S6	950	11
16	ВКРН-АП/АД-9ДУ-02	АИР180М4	1450	30
17	ВКРН-АП/АД-10ДУ-00	АИР132М8	715	5,5
18	ВКРН-АП/АД-10ДУ-01	АИР160М6	970	15
19	ВКРН-АП/АД-11,2ДУ-00	АИР160М8	730	11
20	ВКРН-АП/АД-11,2ДУ-01	АИР200L6	950	30
21	ВКРН-АП/АД-12,5ДУ-00	АИР160М12	475	5,5
22	ВКРН-АП/АД-12,5ДУ-01	АИР200М8	730	18,5
23	ВКРН-АП/АД-12,5ДУ-02	АИР250S6	960	45
24	ВКРН-АП/АД-14ДУ-00	АИР180МВ12	475	9
25	ВКРН-АП/АД-14ДУ-01	АИР250S8	730	37

CHARACTERISTICS SUMMARY DIAGRAM

2500 – 50000 m³/hour

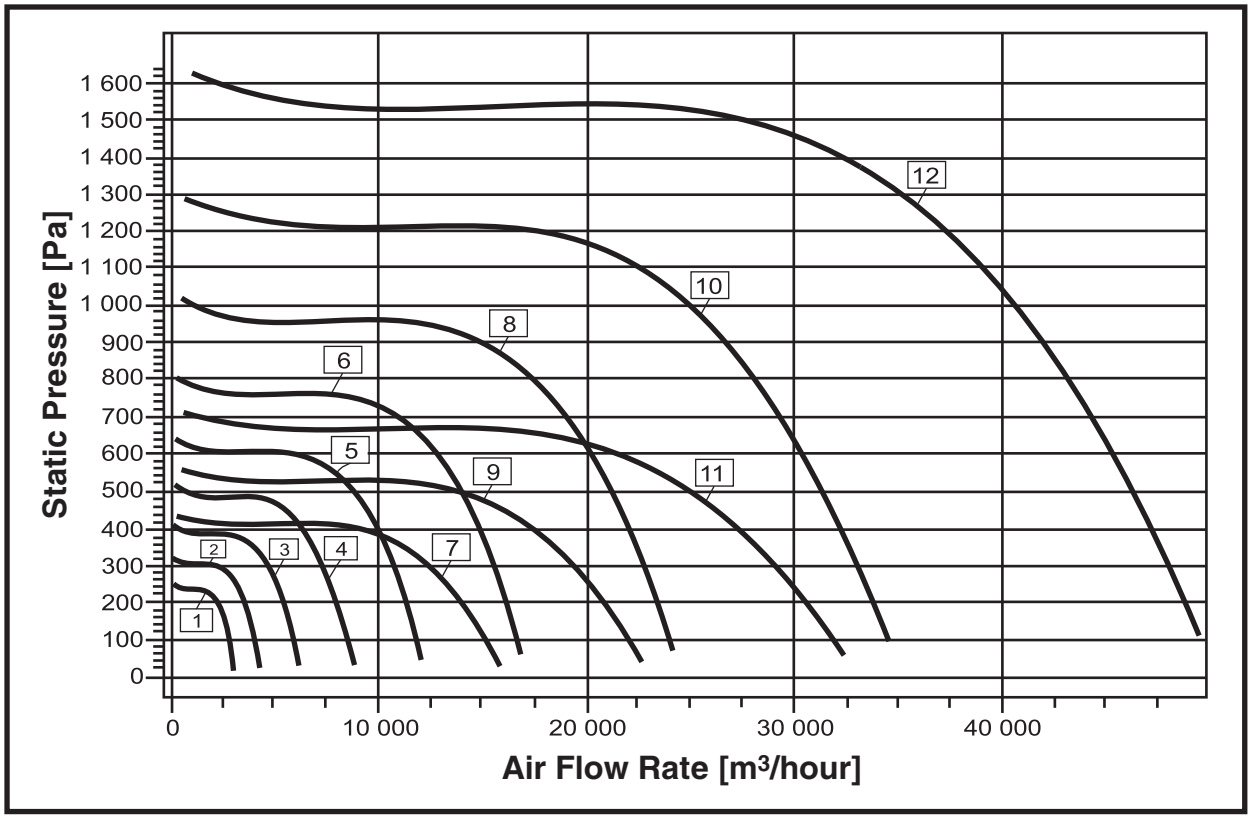

№	Fan Type	Electric Motor Type	Frequency n [min^{-1}]	Power N_y [kW]
1	ВКРН-БП/БД-3,15ДУ-00	АИР63А4	1450	0,25
2	ВКРН-БП/БД-3,55ДУ-00	АИР71А4	1450	0,55
3	ВКРН-БП/БД-4ДУ-00	АИР71В4	1450	0,75
4	ВКРН-БП/БД-4,5ДУ-00	АИР80В4	1450	1,5
5	ВКРН-БП/БД-5ДУ-00	АИР90L4	1450	2,2
6	ВКРН-БП/БД-5,6ДУ-00	АИР100L4	1450	4
7	ВКРН-БП/БД-6,3ДУ-00	АИР100L6	950	2,2
8	ВКРН-БП/БД-6,3ДУ-01	АИР132S4	1450	7,5
9	ВКРН-БП/БД-7,1ДУ-00	АИР112МВ6	950	4
10	ВКРН-БП/БД-7,1ДУ-01	АИР160S4	1450	15
11	ВКРН-БП/БД-8ДУ-00	АИР132М6	950	7,5
12	ВКРН-БП/БД-8ДУ-01	АИР180S4	1450	22

CHARACTERISTICS SUMMARY DIAGRAM

2500 – 130000 m³/hour

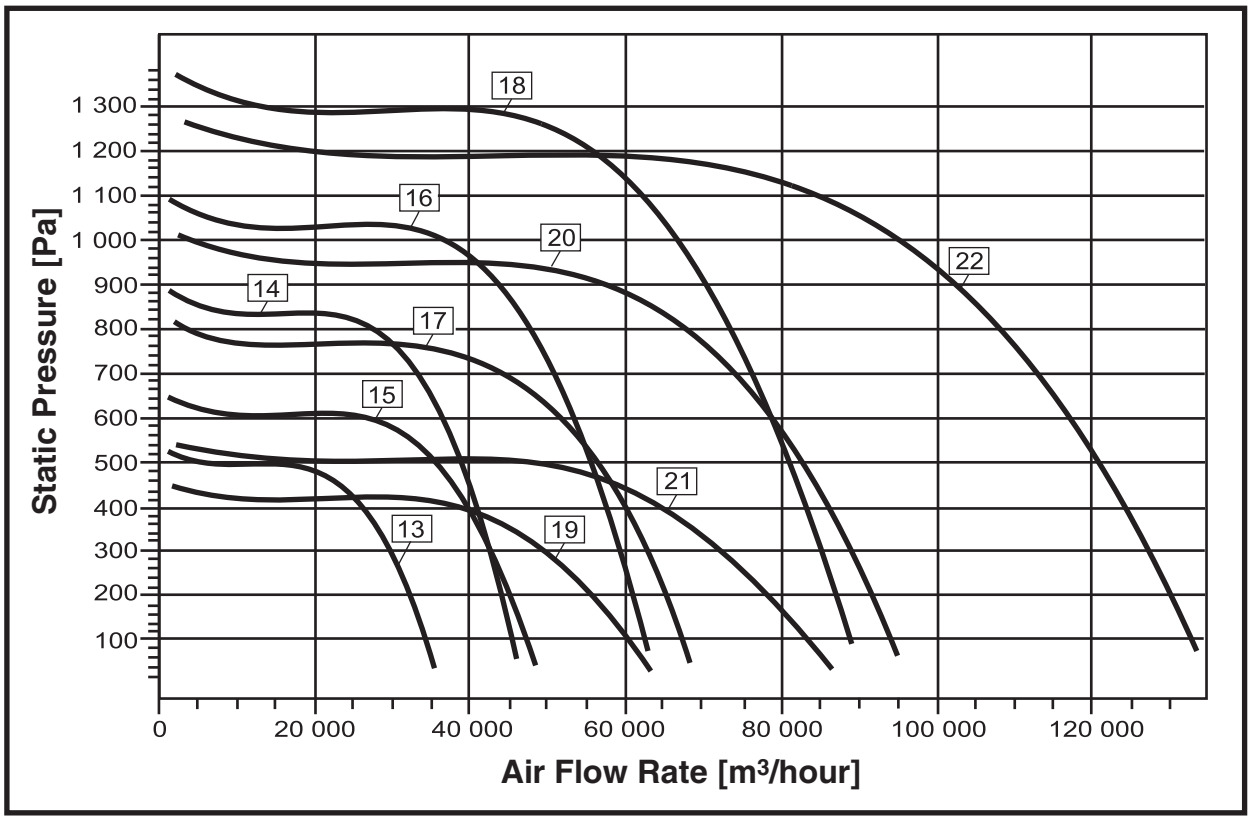

№	Fan Type	Electric Motor Type	Frequency n [min-1]	Power N_y [kW]
13	ВКРН-БП/БД-9ДУ-00	АИР132М8	730	5,5
14	ВКРН-БП/БД-9ДУ-01	АИР160S6	950	11
15	ВКРН-БП/БД-10ДУ-00	АИР160S8	730	7,5
16	ВКРН-БП/БД-10ДУ-01	АИР180М6	950	18,5
17	ВКРН-БП/БД-11,2ДУ-00	АИР180М8	730	15
18	ВКРН-БП/БД-11,2ДУ-01	АИР225М6	950	37
19	ВКРН-БП/БД-12,5ДУ-00	А180МВ12	485	9
20	ВКРН-БП/БД-12,5ДУ-01	АИР225М8	730	30
21	ВКРН-БП/БД-14ДУ-00	А200LА12	475	13
22	ВКРН-БП/БД-14ДУ-01	АИР250М8	730	45

CHARACTERISTICS SUMMARY DIAGRAM

2500 – 85000 m³/hour

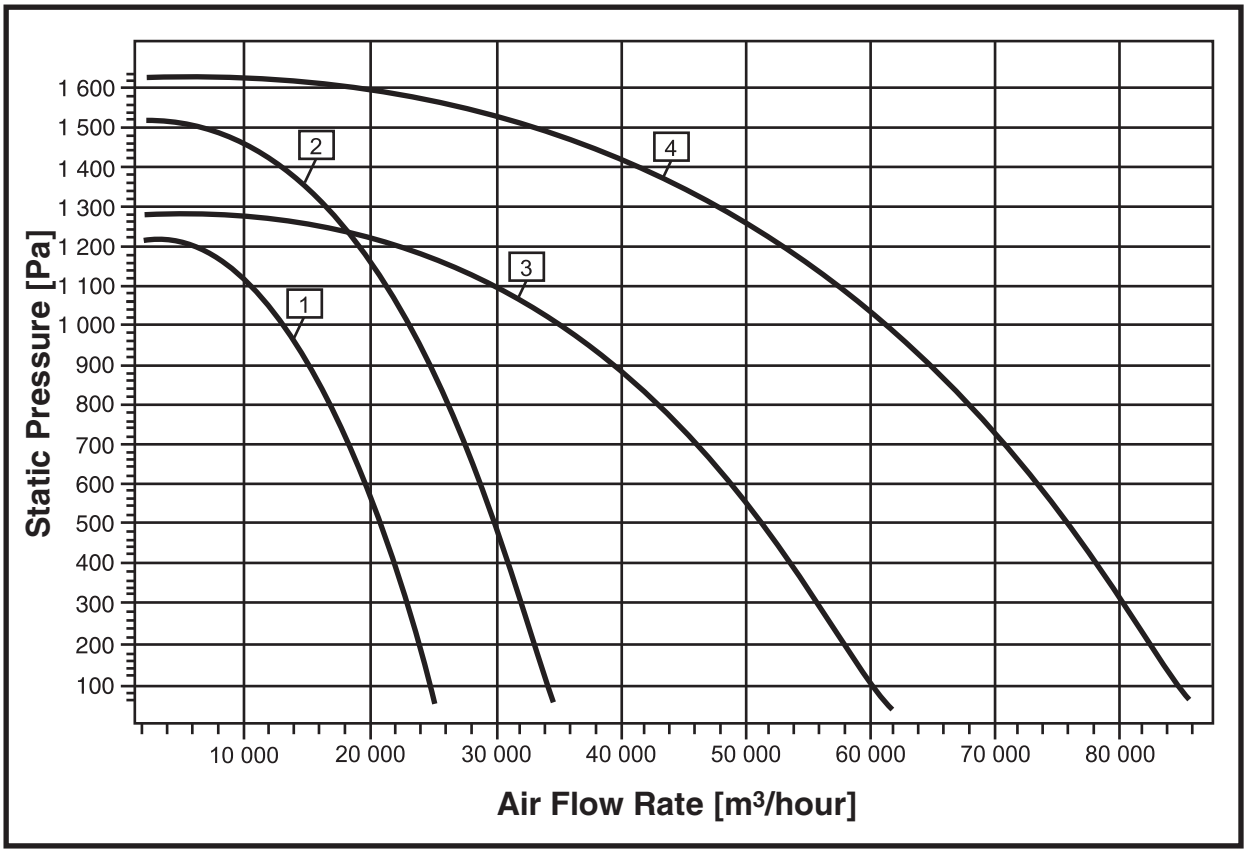

№	Fan Type	Electric Motor Type	Frequency n [min⁻¹]	Power N_y [kW]
1	ВКРН-ВП/ВД-7,1ДУ-00	АИР132S4	1450	7,5
2	ВКРН-ВП/ВД-8ДУ-00	АИР132М4	1450	11
	ВКРН-ВП/ВД-8ДУ-01	АИР160S4	1450	15
3	ВКРН-ВП/ВД-11,2ДУ-00	АИР180М6	950	18,5
4	ВКРН-ВП/ВД-12,5ДУ-00	АИР200L6	950	30

Manufactured in accordance with TU 4861-004-64600223-12

2300 – 125000 m³/hour

- Impeller with backward-curved blades
- Welded steel frame with powder paint coating
- Galvanized steel hood
- Vertical emission of removable smoke

Low energy consumption.

Completed with two-speed induction motor (optional).

Capability of more firm installation of several fans on a roof. Full weather protection. Return valve is not required.

Maximum stumpiness of the structure.

Exceptional aerodynamic intensity of the “Б”-type impellers.

Explosion-proof version is available.

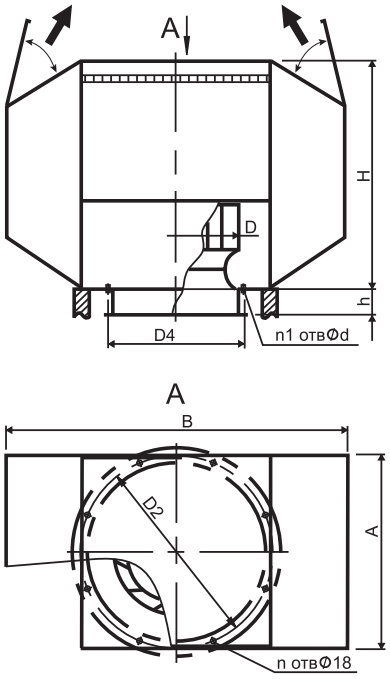

Fans are denoted as follows:

ВКРН – АФ - 3,15 В ДУ 400 - 01 - У1

- Climatic version;
- Index number of modification;
- Maximum temperature of handled medium;
- Designation code (smoke removal);
- Designation code (smoke removal);
- Impeller diameter in decimeters;
- Air outlet direction option (Ф) – Vertical air discharge upwards;
- Aerodynamic power index (А, Б, or В);
- Impeller blades type H – Backward-curved blades;
- Fan type (Roof fan, Radial).

№	Fan Type	Dimensions [mm]										Weight [kg]
		A	B	D	D2	D4	H	h	d	n	n1	
1	ВКРН-АФ/БФ-3,15ДУ-00	470	610/700	315	470	345	500/532	100	7	4	4	42,4/46
2	ВКРН-АФ/БФ-3,55ДУ-00	560	685/785	355	585	385	595/635	100	7	4	4	50/54
3	ВКРН-АФ/БФ-4ДУ-00	560	786/880	400	585	430	590/630	130	7	4	4	70,2/73
4	ВКРН-АФ/БФ-4,5ДУ-00	650	860/985	450	665	480	655/700	130	7	4	5	86/98
5	ВКРН-АФ/БФ-5ДУ-00	755	950/1090	500	772	530	695/745	140	7	8	5	135,3/150
6	ВКРН-АФ/БФ-5,6ДУ-00	755	1060/1220	560	772	590	825/880	130	10	8	6	170,2/192
7	ВКРН-АФ/БФ-6,3ДУ-00	765	1190/1365	630	772	660	840/935	200	10	8	6	174/197
8	ВКРН-АФ/БФ-6,3ДУ-01	765	1190/1365	630	772	660	840/935	200	10	8	6	202/236
9	ВКРН-АФ/БФ-7,1ДУ-00	870	1335/1535	710	772	660	1115/1185	160	10	8	6	248/278
10	ВКРН-АФ/БФ/ВФ-7,1ДУ-01	870	1335/1535/1335	710	772	660	1115/1185/1115	160	10	8	6	286/360/271
11	ВКРН-АФ/БФ-8ДУ-00	1080	1500/1725	800	1072	830	1185/1265	197	10	8	6	360/375
12	ВКРН-АФ/БФ/ВФ-8ДУ-01	1080	1500/1725/1500	800	1072	830	1185/1265/1185	197	10	8	6	437/447/390
13	ВКРН-АФ/БФ-9ДУ-00	1095	1685/1935	900	1072	940	1225/1315	130	10	8	8	388/435
14	ВКРН-АФ/БФ-9ДУ-01	1095	1685/1935	900	1072	940	1225/1315	130	10	8	8	441/473
15	ВКРН-АФ-9ДУ-02	1095	1685	900	1072	940	1225	130	10	8	8	520
16	ВКРН-АФ/БФ-10ДУ-00	1300	1865/2145	1000	1272	1040	1450/1550	130	10	8	8	493/662
17	ВКРН-АФ/БФ-10ДУ-01	1300	1865/2145	1000	1272	1040	1450/1550	130	10	8	8	518/713
18	ВКРН-АФ/БФ-11,2ДУ-00	1350	2085/2400	1120	1272	1165	1485/1595	190	12	8	9	695/782
19	ВКРН-АФ/БФ/ВФ-11,2ДУ-01	1350	2085/2400/2085	1120	1272	1165	1485/1595/1485	190	12	8	9	850/912/762
20	ВКРН-АФ/БФ-12,5ДУ-00	1530	2325/2675	1250	1522	1295	1562/1690	130	12	8	9	787/973
21	ВКРН-АФ/БФ-12,5ДУ-01	1530	2325/2675	1250	1522	1295	1562/1690	130	12	8	9	902/1093
22	ВКРН-АФ/ВФ-12,5ДУ-02	1530	2325	1250	1522	1295	1562	130	12	8	9	1153/971
23	ВКРН-АФ/БФ-14ДУ-00	1680	2600/2990	1400	1522	1295	1810/1950	130	12	8	9	1163/1240
24	ВКРН-АФ/БФ-14ДУ-01	1680	2600/2990	1400	1522	1295	1810/1950	130	12	8	9	1351/1580

CHARACTERISTICS SUMMARY DIAGRAM

2300 – 40000 m³/hour

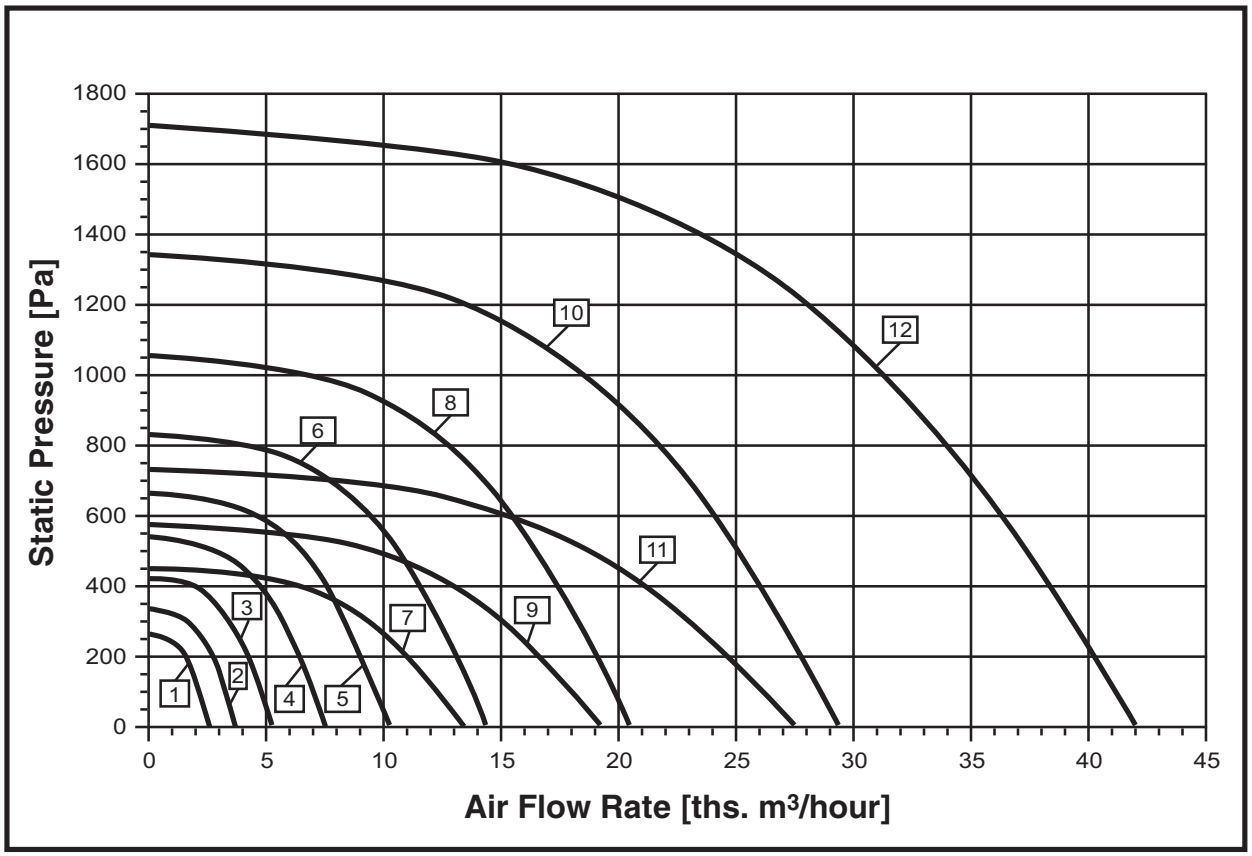

№	Fan Type	Electric Motor Type	Frequency n [min^{-1}]	Power N_y [kW]
1	ВКРН-АФ-3,15ДУ-00	АИР56В4	1450	0,18
2	ВКРН-АФ-3,55ДУ-00	АИР63В4	1450	0,37
3	ВКРН-АФ-4ДУ-00	АИР71А4	1450	0,55
4	ВКРН-АФ-4,5ДУ-00	АИР80А4	1450	1,1
5	ВКРН-АФ-5ДУ-00	АИР80В4	1450	1,5
6	ВКРН-АФ-5,6ДУ-00	АИР100S4	1450	3
7	ВКРН-АФ-6,3ДУ-00	АИР90L6	950	1,5
8	ВКРН-АФ-6,3ДУ-01	АИР112М4	1450	5,5
9	ВКРН-АФ-7,1ДУ-00	АИР112МА6	950	3
10	ВКРН-АФ-7,1ДУ-01	АИР132М4	1450	11
11	ВКРН-АФ-8ДУ-00	АИР132S6	950	5,5
12	ВКРН-АФ-8ДУ-01	АИР160S4	1450	15
	ВКРН-АФ-8ДУ-02	АИР160М4	1450	18,5

CHARACTERISTICS SUMMARY DIAGRAM

2300 – 108000 m³/hour

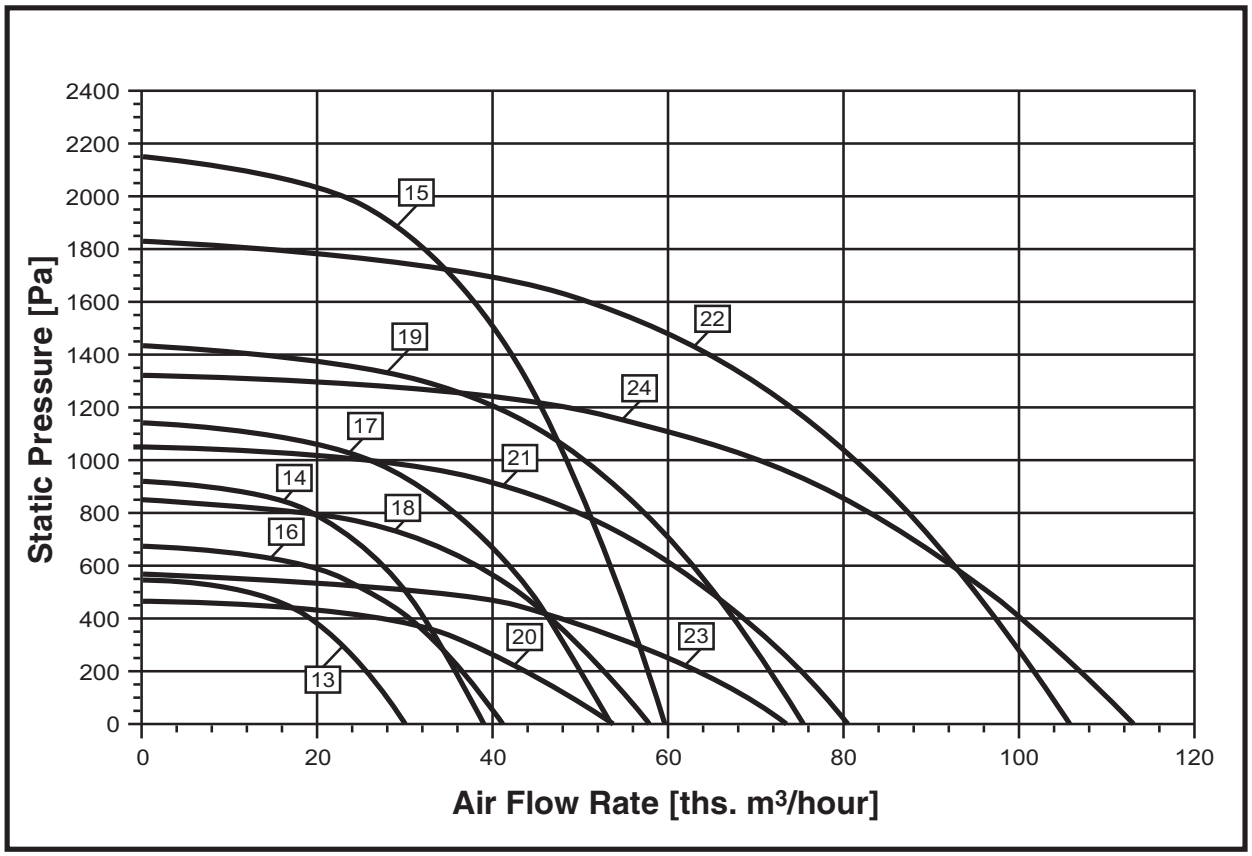

№	Fan Type	Electric Motor Type	Frequency n [min^{-1}]	Power N_y [kW]
13	ВКРН-АФ-9ДУ-00	АИР132S8	730	4
14	ВКРН-АФ-9ДУ-01	АИР160S6	950	11
15	ВКРН-АФ-9ДУ-02	АИР180М4	1450	30
16	ВКРН-АФ-10ДУ-00	АИР132М8	730	5,5
17	ВКРН-АФ-10ДУ-01	АИР160М6	950	15
18	ВКРН-АФ-11,2ДУ-00	АИР160М8	730	11
19	ВКРН-АФ-11,2ДУ-01	АИР200L6	950	30
20	ВКРН-АФ-12,5ДУ-00	АИР160М12	485	5,5
21	ВКРН-АФ-12,5ДУ-01	АИР200М8	730	18,5
22	ВКРН-АФ-12,5ДУ-02	АИР250S6	960	45
23	ВКРН-АФ-14ДУ-00	АИР180МВ12	475	9
24	ВКРН-АФ-14ДУ-01	АИР250S8	730	37

CHARACTERISTICS SUMMARY DIAGRAM

2600 – 47000 m³/hour

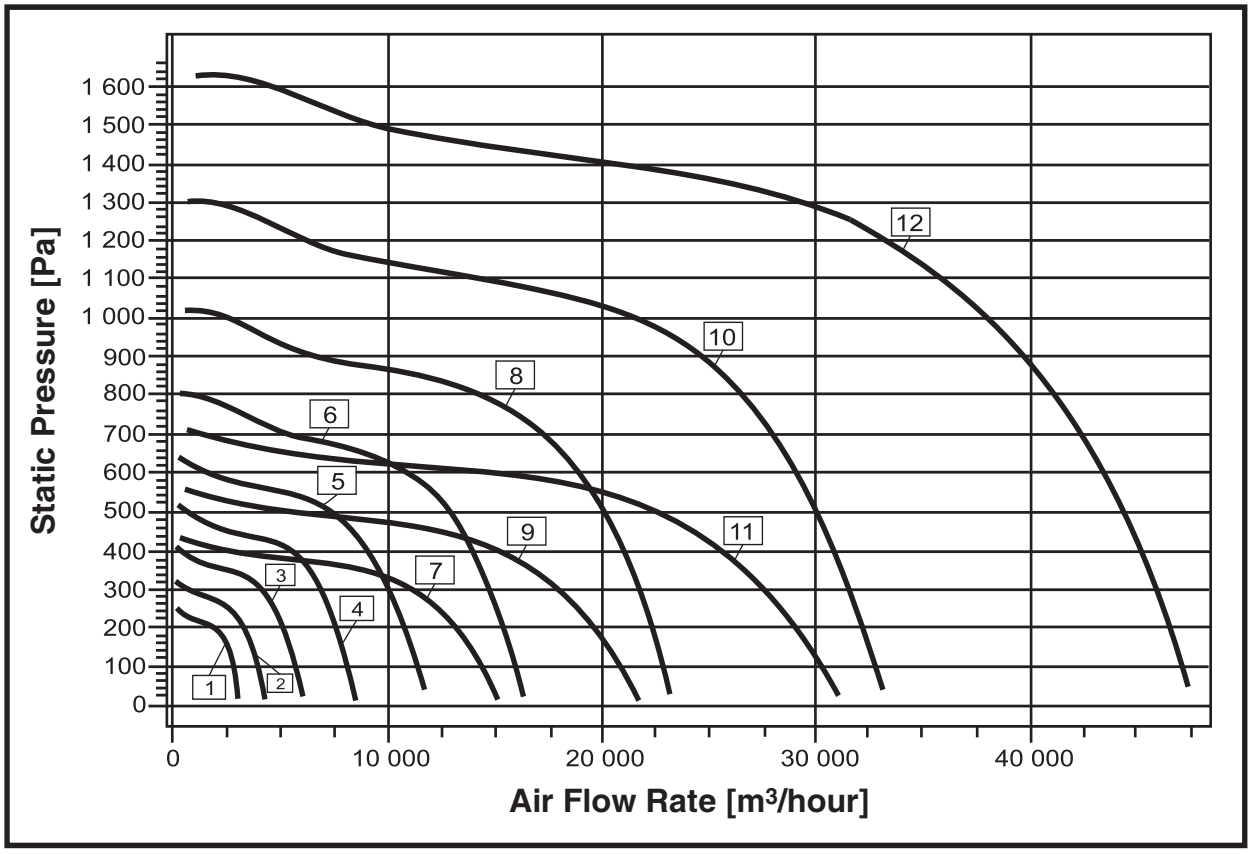

№	Fan Type	Electric Motor Type	Frequency n [min^{-1}]	Power N_y [kW]
1	ВКРН-БФ-3,15ДУ-00	АИР63А4	1450	0,25
2	ВКРН-БФ-3,55ДУ-00	АИР71А4	1450	0,55
3	ВКРН-БФ-4ДУ-00	АИР71В4	1450	0,75
4	ВКРН-БФ-4,5ДУ-00	АИР80В4	1450	1,5
5	ВКРН-БФ-5ДУ-00	АИР90L4	1450	2,2
6	ВКРН-БФ-5,6ДУ-00	АИР100L4	1450	4
7	ВКРН-БФ-6,3ДУ-00	АИР100L6	950	2,2
8	ВКРН-БФ-6,3ДУ-01	АИР132S4	1450	7,5
9	ВКРН-БФ-7,1ДУ-00	АИР112МВ6	950	4
10	ВКРН-БФ-7,1ДУ-01	АИР160S4	1450	15
11	ВКРН-БФ-8ДУ-00	АИР132М6	950	7,5
12	ВКРН-БФ-8ДУ-01	АИР180S4	1450	22

CHARACTERISTICS SUMMARY DIAGRAM

2600 – 125000 m³/hour

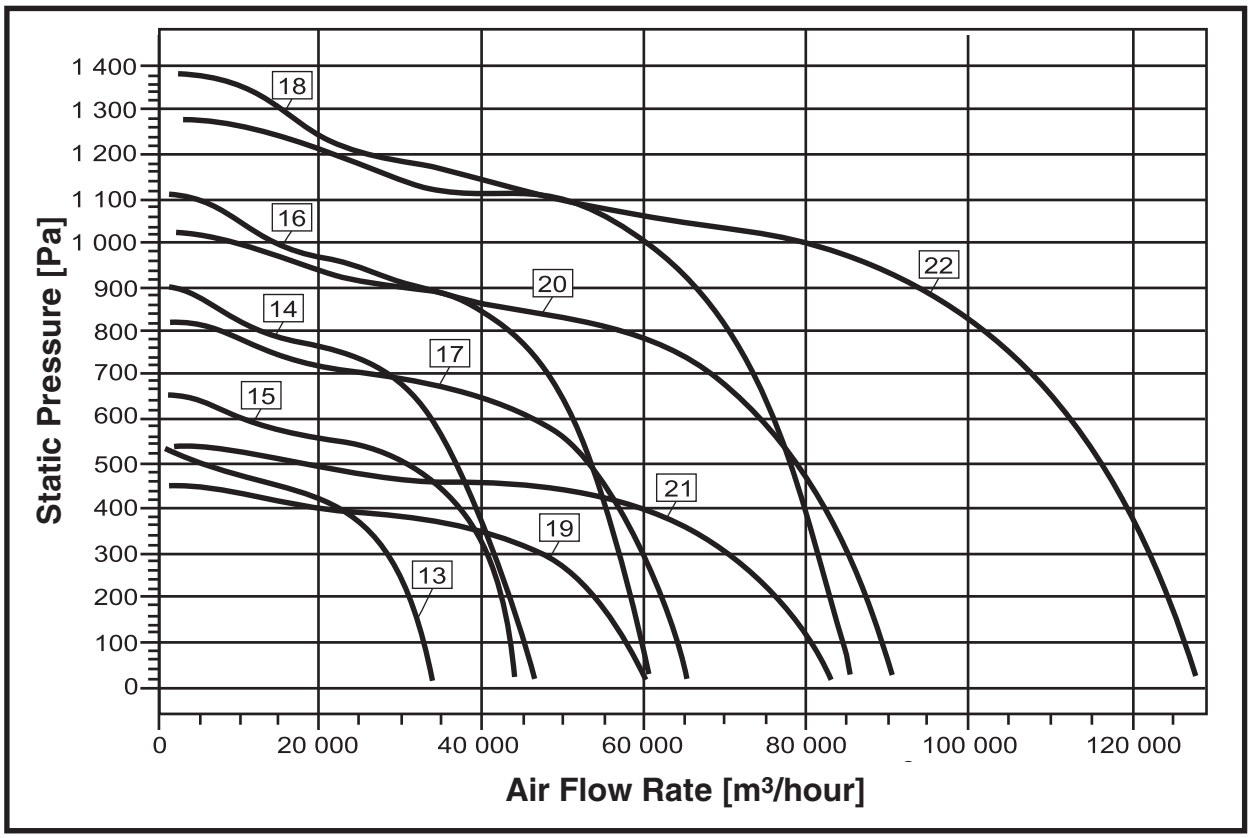

№	Fan Type	Electric Motor Type	Frequency n [min^{-1}]	Power N_y [kW]
13	ВКРН-БФ-9ДУ-00	АИР132М8	730	5,5
14	ВКРН-БФ-9ДУ-01	АИР160S6	950	11
15	ВКРН-БФ-10ДУ-00	АИР160S8	730	7,5
16	ВКРН-БФ-10ДУ-01	АИР180М6	950	18,5
17	ВКРН-БФ-11,2ДУ-00	АИР180М8	730	15
18	ВКРН-БФ-11,2ДУ-01	АИР225М6	950	37
19	ВКРН-БФ-12,5ДУ-00	А180МВ12	485	9
20	ВКРН-БФ-12,5ДУ-01	АИР225М8	730	30
21	ВКРН-БФ-14ДУ-00	А200LА12	475	13
22	ВКРН-БФ-14ДУ-01	АИР250М8	730	45

CHARACTERISTICS SUMMARY DIAGRAM

1800 - 80000 m³/hour

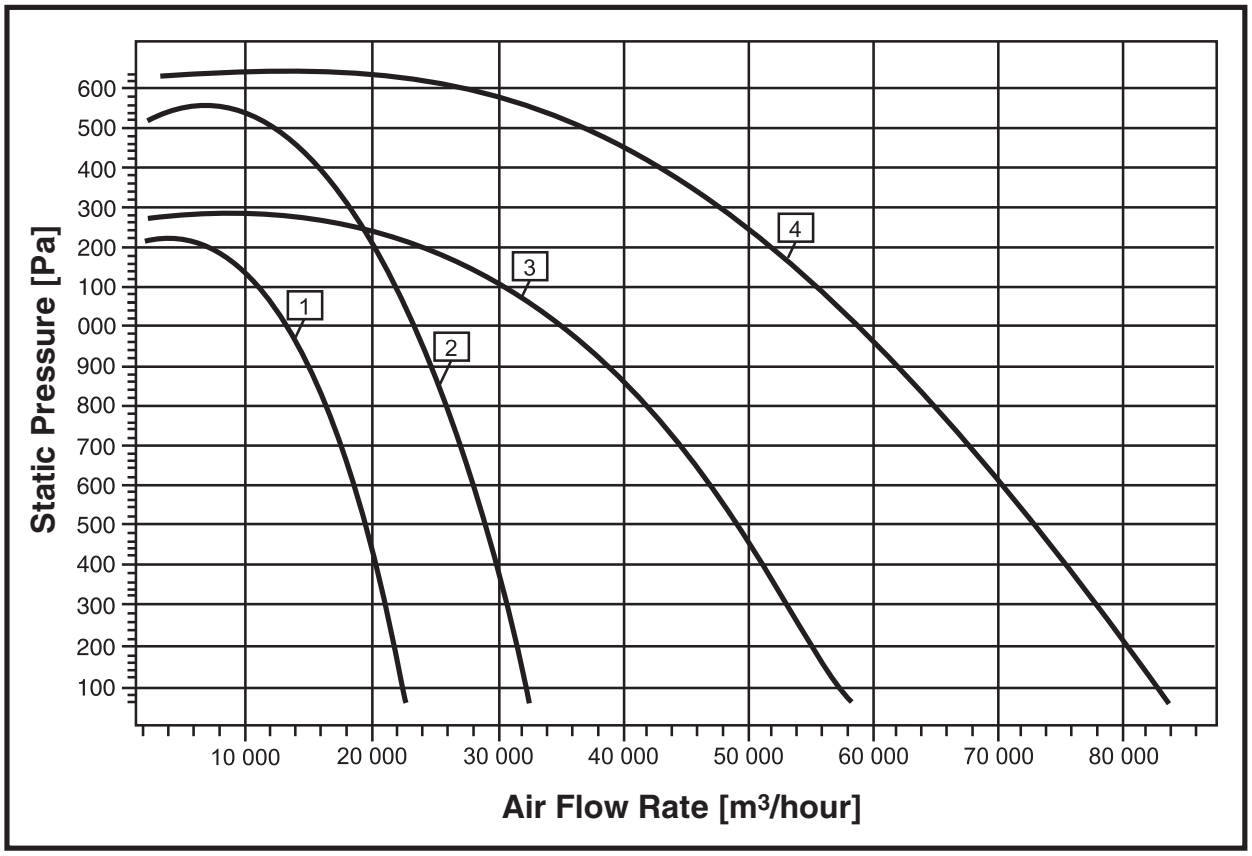

№	Fan Type	Electric Motor Type	Frequency n [min^{-1}]	Power N_y [kW]
1	ВКРН-ВФ-7,1ДУ-00	АИР132S4	1450	7,5
2	ВКРН-ВФ-8ДУ-00	АИР132М4	1450	11
	ВКРН-ВФ-8ДУ-01	АИР160S4	1450	15
3	ВКРН-ВФ-11,2ДУ-00	АИР180М6	950	18,5
4	ВКРН-ВФ-12,5ДУ-00	АИР200L6	950	30

Manufactured in accordance with TU 4861-004-64600223-12

2000 – 47000 m³/hour

- Forward-curved blades impeller
- Welded frame with powder paint coating
- Galvanized steel hood
- Bilateral emission of removable smoke

Capability of high pressure maintaining the compact structure.

Capability of compact installation of several fans on a roof.

Fan design is protected by the Russian Useful Model Certificate.

Explosion-proof version is available.

Fans are denoted as follows:

ВКРВ – 3,15 В ДУ 400 – 01 – У1

- У1 – Climatic version;
- 01 – Index number of modification;
- 400 – Maximum temperature of handled medium;
- ДУ – Designation code (smoke removal);
- В – Designation code (smoke removal);
- 3,15 – Impeller diameter in decimeters;
- В – Impeller blades type B – forward-curved blades;
- ВКРВ – Fan type (Roof fan, Radial).

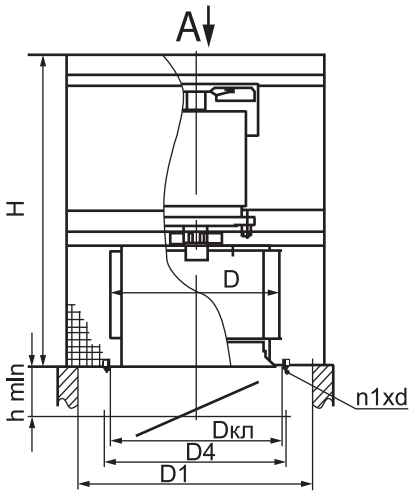

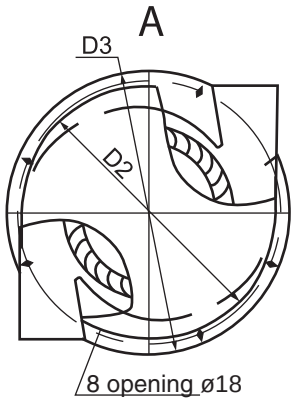

Fan Model	Dimensions [mm]									n	n1
	D	D1	D2	D3	D4	Dкл	H	h1	d		
ВКРВ-2,5ДУ	250	400	470	528	280	250	590	190	7	4	4
ВКРВ-2,8ДУ	280	400	470	528	310	280	615	220	7	4	4
ВКРВ-3,15ДУ	315	400	470	528	345	315	615	220	7	4	4
ВКРВ-3,55ДУ	355	515	585	655	385	355	656	260	7	4	5
ВКРВ-4ДУ	400	515	585	655	430	400	820	260	7	8	5
ВКРВ-4,5ДУ	450	700	772	810	480	450	854	280	7	8	5
ВКРВ-5ДУ	500	700	772	810	530	500	1015	320	7	8	5
ВКРВ-5,6ДУ	560	700	772	810	590	560	1174	340	10	8	5
ВКРВ-6,3ДУ	630	1000	1072	1112	660	630	1250	380	10	8	5
ВКРВ-7,1ДУ	710	1000	1072	1112	740	710	1470	410	10	8	6
ВКРВ-8ДУ	800	1200	1072	1312	830	800	1540	460	10	8	6

CHARACTERISTICS SUMMARY DIAGRAM

2000 – 17500 m³/hour

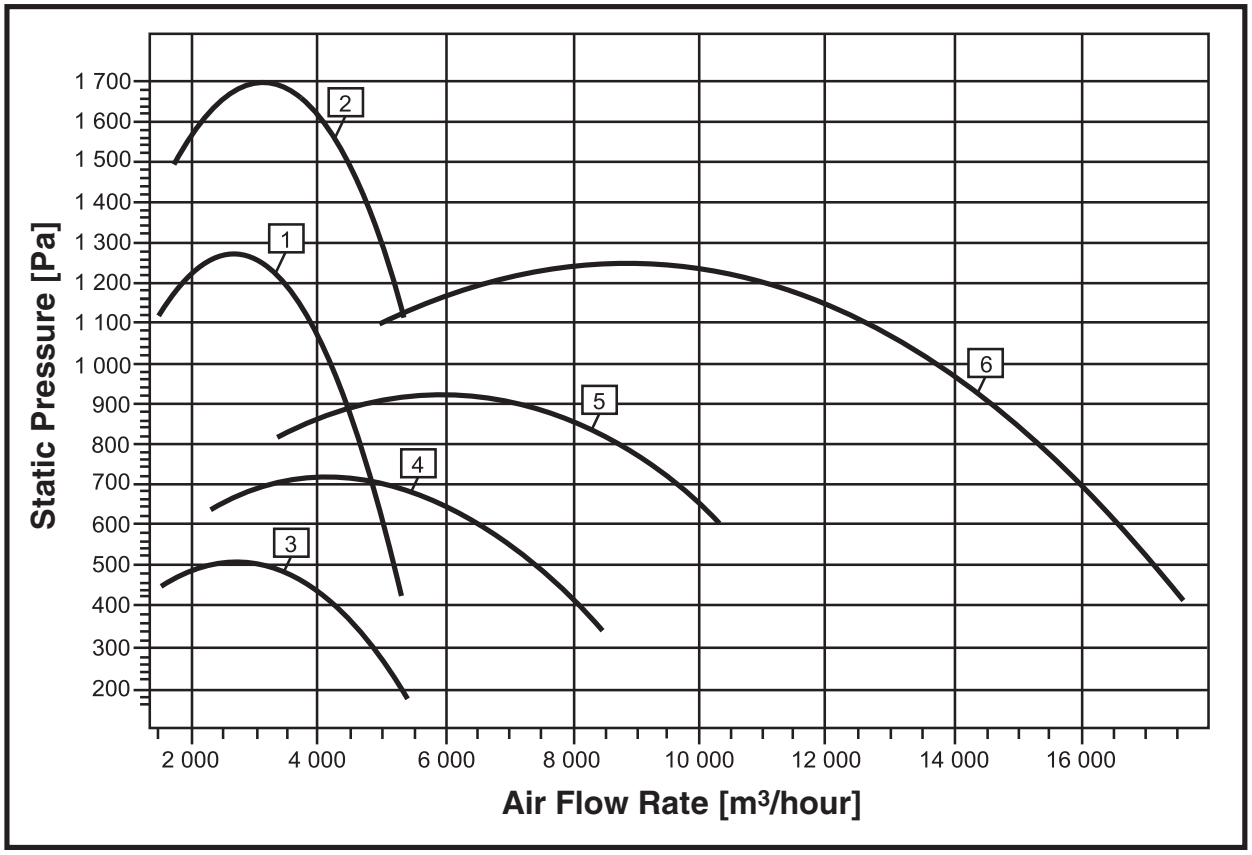

No.	Fan Model	No. of Modification	Electric Motor Type	Motor Parameters		Capacity Rating [m³/hour]	Fan Weight [kg]
				Rotation Speed [rpm]	Power [kW]		
1	ВКРВ-2,5ДУ	00	АИР80В2	2900	2,2	3000	70,1
		01	АИР90L2		3	4000	81,1
		02	АИР100S2		4	5200	80,2
2	ВКРВ-2,8ДУ	00	АИР90L2	2900	3	2800	85
		01	АИР100S2		4	3800	89
		02	АИР100L2		5,5	5100	94
3	ВКРВ-3,15ДУ	00	АИР80В4	1450	1,5	5500	63
4	ВКРВ-3,55ДУ	00	АИР80В4	1450	1,5	4500	78,5
		01	АИР90L4		2,2	6500	108
		02	АИР100S4		3	8000	120
5	ВКРВ-4ДУ	00	АИР100S4	1450	3	6000	121
		01	АИР100L4		4	8000	135
		02	АИР112М4		5,5	10000	140
6	ВКРВ-4,5ДУ	00	АИР112М4	1450	5,5	9000	168
		01	АИР132S4		7,5	13000	193
		02	АИР132М4		11	17000	235

CHARACTERISTICS SUMMARY DIAGRAM

5000 – 47000 m³/hour

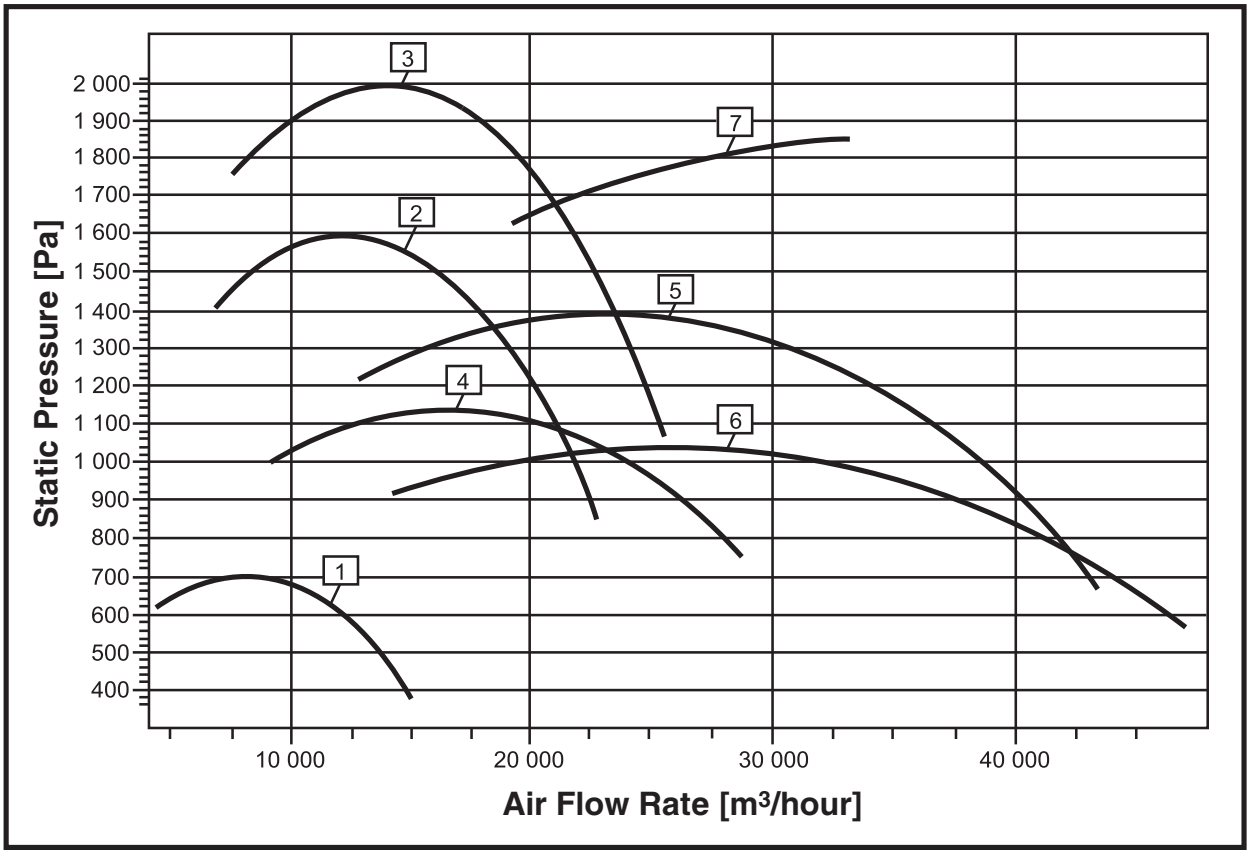

No.	Fan Model	No. of Modification	Electric Motor Type	Motor Parameters		Capacity Rating [m³/hour]	Fan Weight [kg]
				Rotation Speed [rpm]	Power [kW]		
1	ВКРВ-5ДУ	00	АИР112МА6	960	3	8000	158
		01	АИР112МВ6	960	4	11000	158
		02	АИР132S6	960	5,5	15000	167
2		03	АИР132М4	1450	11	15000	173
		04	АИР160М4	1450	18,5	23000	286
3	ВКРВ-5,6ДУ	00	АИР160S4	1450	15	14500	291
		01	АИР180S4		22	20000	323
		02	АИР180М4		30	25000	352
4	ВКРВ-6,3ДУ	00	АИР160S6	970	11	20000	360
		01	АИР160М6		15	28000	372
5	ВКРВ-7,1ДУ	00	АИР160М6	950	15	25000	472
		01	АИР200М6		22	35000	572
		02	АИР200L6		30	40000	637
6	ВКРВ-8ДУ	00	АИР180М8	730	15	30000	592
		01	АИР200L8	730	22	46000	645
7		02	АИР200М6	975	22	26000	605
		03	АИР200L6	975	30	33000	660

Manufactured in accordance with TU 4861-004-64600223-12

5000 – 90000 m³/hour

- Double fans installation
- Forward-curved blades impeller
- Welded frame with powder paint coating
- Galvanized steel hood
- Bilateral emission of removable smoke

Capability of high pressure and increased efficiency maintaining the compact structure.

Capability of compact installation of several fans on a roof.

Fan design is protected by the Russian Useful Model Certificate.

Explosion-proof version is available.

Fans are denoted as follows:

ВКРВ 2х - 3,15 В ДУ 400 - 01 У1

- У1 – Climatic version;
- 01 – Index number of modification;
- 400 – Maximum temperature of the handled medium;
- ДУ – Designation code (smoke removal);
- В – Enclosure type (explosion proof);
- 3,15 – Impeller diameter in decimeters;
- 2х – Sign of fans coupling in a plant;
- В – Impeller blades type – B – forward-curved blades;
- ВКРВ – Fan type (Roof fan, Radial).

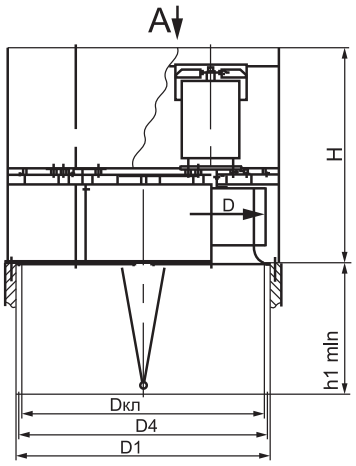

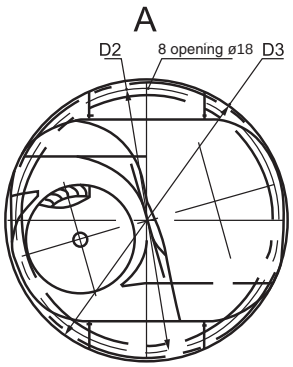

Fan Model	Dimensions [mm]									n1
	D	D1	D2	D3	D4	Dкл	H	h1	d	
ВКРВ2х2,5ДУ	250	700	665	690	560	560	590	323	7	6
ВКРВ2х5ДУ	500	1270	1272	1320	1125	1000	1015	600	10	8
ВКРВ2х5,6ДУ	560	1500	1522	1595	1245	1250	1174	730	12	9
ВКРВ2х6,3ДУ	630	1500	1522	1595	1395	1250	1250	730	12	9
ВКРВ2х7,1ДУ	710	1685	1757	1825	1555	1510	1610	810	12	13
ВКРВ2х8ДУ	800	1900	1957	2000	1745	1680	1663	910	12	13

CHARACTERISTICS SUMMARY DIAGRAM

5000 – 90000 m³/hour

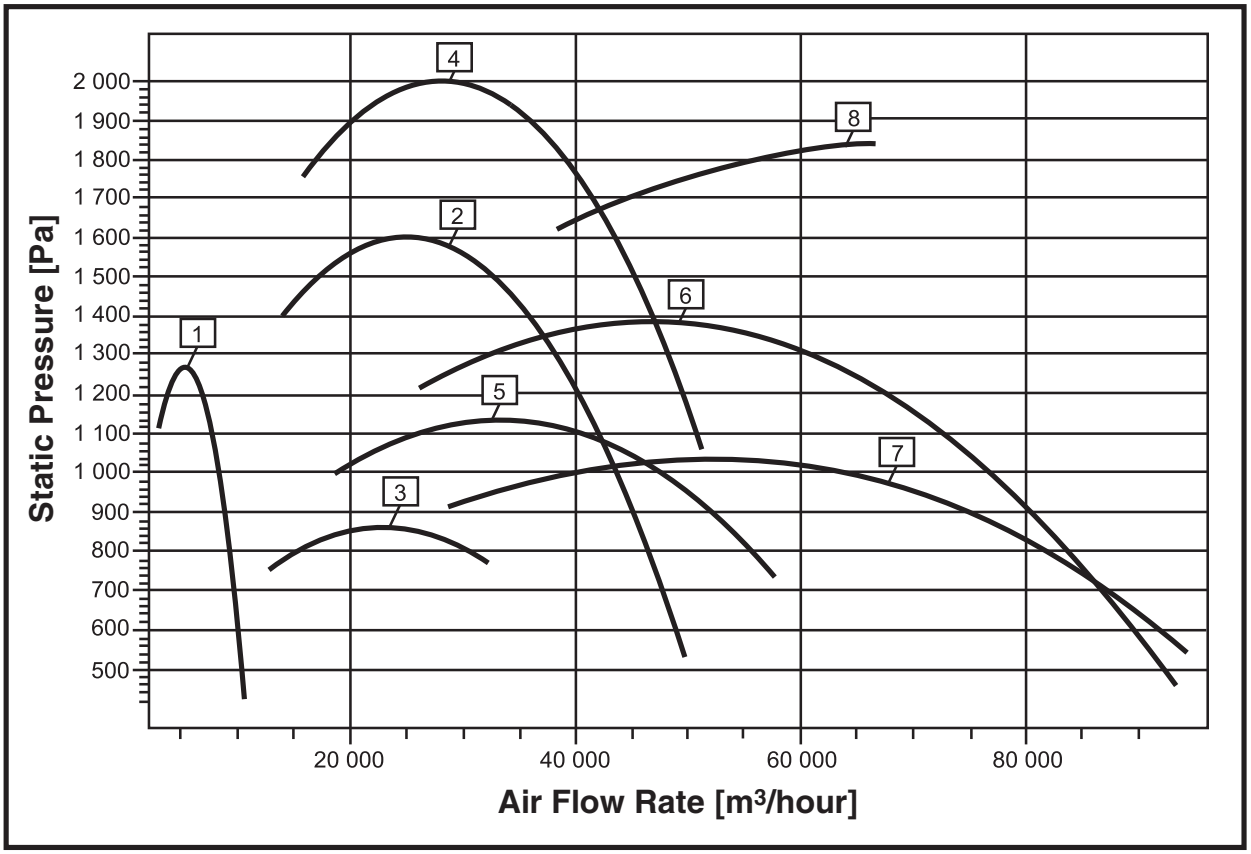

No.	Fan Model	No. of Modification	Electric Motor Type	Motor Parameters		Capacity Rating [m³/hour]	Fan Weight [kg]
				Rotation Speed [rpm]	Power [kW]		
1	ВКРВ2х2,5ДУ	00	АИР80В2	2845	2x2.2	6000	159
		01	АИР90L2		2x3	8000	179
		02	АИР100S2		2x4	11000	177
2	ВКРВ2х5ДУ	00	АИР132М4	1450	2x11	30000	426
		01	АИР160М4		2x18.5	46000	615
3	ВКРВ2х5,6ДУ	00	АИР112МА6	970	2x3	18000	474
		01	АИР112МВ6		2x4	23500	504
		02	АИР132S6		2x5.5	31000	513
4		03	АИР160S4	1450	2x15	30000	690
		04	АИР180S4		2x22	41000	754
		05	АИР180М4		2x30	50000	812
5	ВКРВ2х6,3ДУ	00	АИР160S6	970	2x11	40000	681
		01	АИР160М6		2x15	56000	725
6	ВКРВ2х7,1ДУ	00	АИР160М6	970	2x15	50000	918
		01	АИР200М6		2x22	70000	1117
		02	АИР200L6		2x30	86000	1177
7	ВКРВ2х8ДУ	00	АИР180М8	730	2x15	60000	1015
		01	АИР200L8		2x22	92000	1245
8		02	АИР200М6	970	2x22	52000	1145
		03	АИР200L6		2x30	66000	1205

Manufactured in accordance with TU 4861-007-64600223-13

2400 – 120000 m³/hour

- Axial impeller;
- Integrated return valve at the fan outlet
- Reliable room protection against weather
- Powder paint coating of exteriors

Compact installation of several fans on one roof is available.

Radial roof fans may be replaced under pressure of up to 500 Pa.

Some fans are allowed to be applied in the general ventilation mode providing rotation speed decrease by at least 25% against value specified in the catalogue (for instance, using frequency converter). Application shall be agreed with manufacturer.

Explosion-proof version is available.

Fans are denoted as follows:

ВО 21-210 К А - 6,3 В ДУ 400 - 4 - У1

- Climatic version;
- Number of motor poles;
- Maximum temperature of handled medium;
- Designation code (smoke removal);
- Enclosure type (explosion proof);
- Impeller diameter in decimeters;
- Impeller design: А-4; Б-6;
- Fan design index (roof);
- Aerodynamic configuration index;
- Fan Type (axial fan).

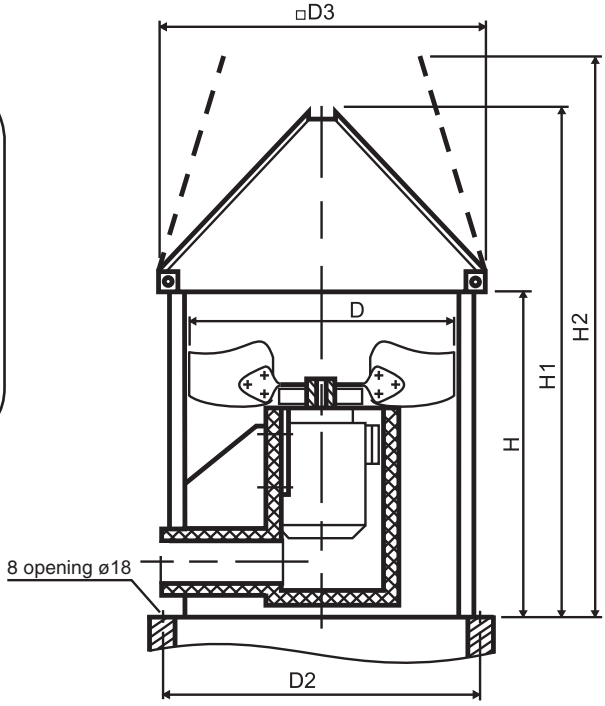

№	Fan Type	Dimensions [mm]						Weight [kg]
		D	D2	D3	H	H1	H2	
1	ВО-21-210КБ-4ДУ-4	400	585	700	430	620	695	40
2	ВО-21-210КА-5ДУ-4	500	772	810	570	795	895	65
3	ВО-21-210КБ-5ДУ-4	500	772	810	570	795	895	65
4	ВО-21-210КА-6,3ДУ-4	630	772	1000	750	975	1110	110
5	ВО-21-210КБ-6,3ДУ-4	630	772	1000	750	975	1110	110
6	ВО-21-210КА-8ДУ-4	800	1072	1400	900	1280	1430	180
7	ВО-21-210КБ-8ДУ-4	800	1072	1400	900	1280	1430	180
8	ВО-21-210КА-10ДУ-6	1000	1272	1600	1200	1650	1850	280
9	ВО-21-210КБ-10ДУ-6	1000	1272	1600	1200	1650	1850	280
10	ВО-21-210КА-12,5ДУ-8	1250	1522	1800	1500	2050	2320	440
11	ВО-21-210КБ-12,5ДУ-8	1250	1522	1800	1500	2050	2320	440
12	ВО-21-210КА-12,5ДУ-6	1250	1522	1800	1500	2050	2320	440
13	ВО-21-210КБ-12,5ДУ-6	1250	1522	1800	1500	2050	2320	440
14	ВО-21-210КА-16ДУ-8	1600	1957	2200	1800	2555	2860	730
15	ВО-21-210КБ-16ДУ-8	1600	1957	2200	1800	2555	2860	730

CHARACTERISTICS SUMMARY DIAGRAM

2400 – 30000 m³/hour

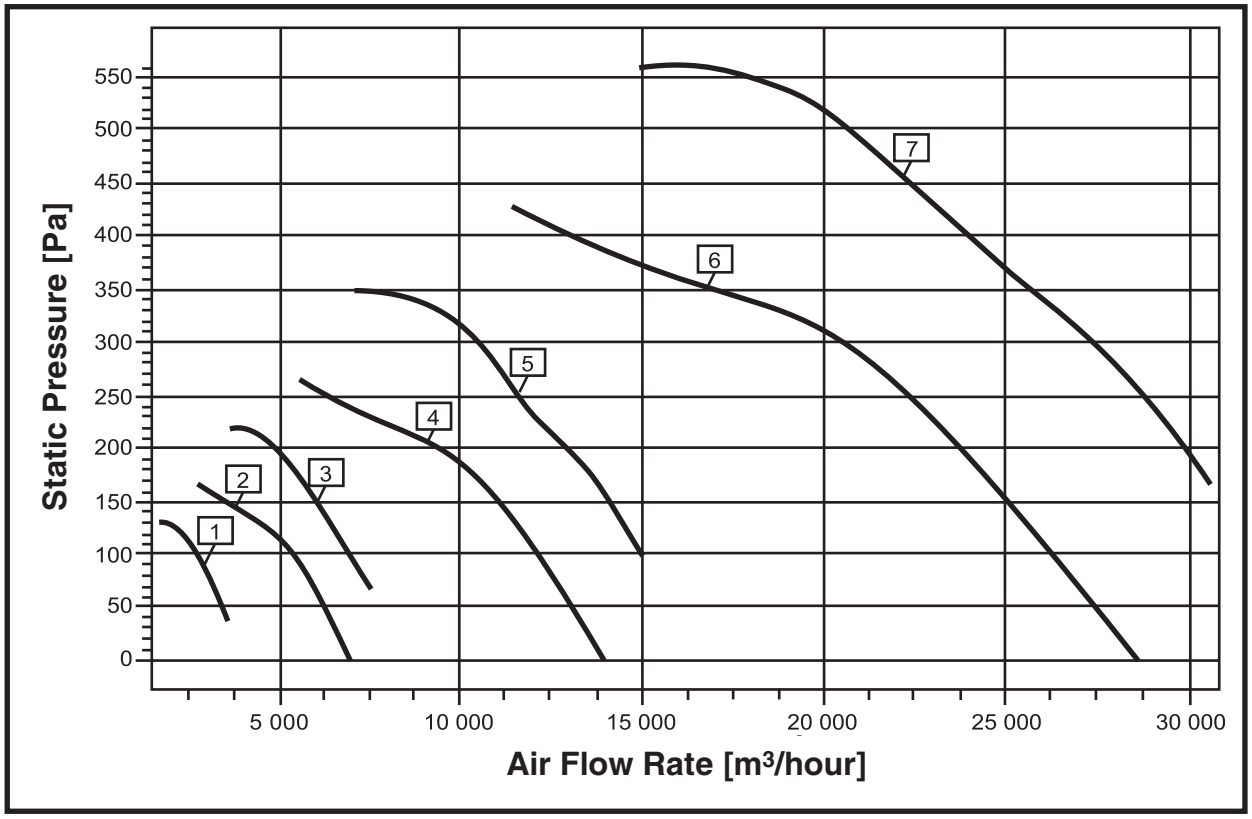

№	Fan Type	Electric Motor Type	Frequency n [min^{-1}]	Power N_y [kW]
1	ВО-21-210КБ-4ДУ-4	АИР63А4	1450	0,25
2	ВО-21-210КА-5ДУ-4	АИР71А4	1450	0,55
3	ВО-21-210КБ-5ДУ-4	АИР71А4	1450	0,55
4	ВО-21-210КА-6,3ДУ-4	АИР80В4	1450	1,5
5	ВО-21-210КБ-6,3ДУ-4	АИР90L4	1450	2,2
6	ВО-21-210КА-8ДУ-4	АИР100L4	1450	4
7	ВО-21-210КБ-8ДУ-4	АИР112М4	1450	5,5

CHARACTERISTICS SUMMARY DIAGRAM

18000 – 120000 m³/hour

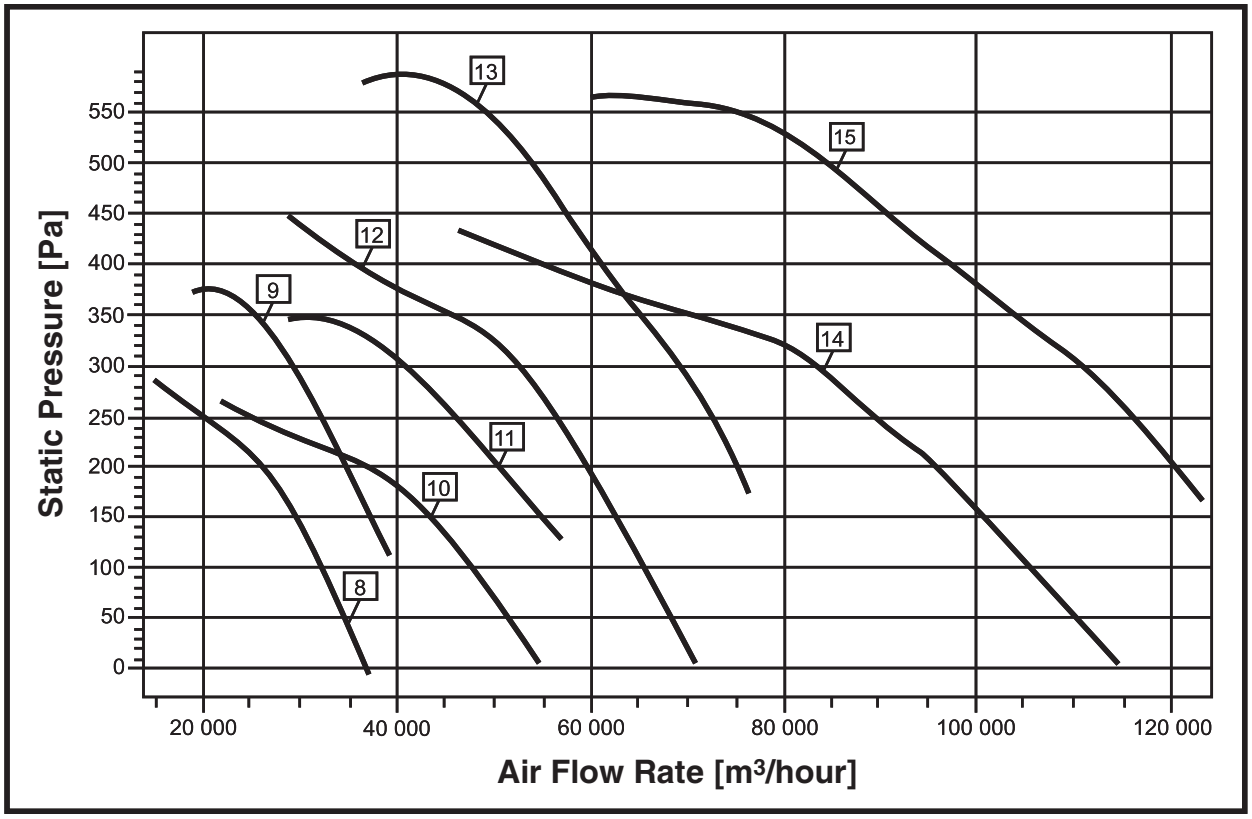

№	Fan Type	Electric Motor Type	Frequency n [min^{-1}]	Power N_y [kW]
8	ВО-21-210КА-10ДУ-6	АИР112МВ6	950	4
9	ВО-21-210КБ-10ДУ-6	АИР132S6	950	5,5
10	ВО-21-210КА-12,5ДУ-8	АИР132М8	950	5,5
11	ВО-21-210КБ-12,5ДУ-8	АИР160S8	950	7,5
12	ВО-21-210КА-12,5ДУ-6	АИР160S6	950	11
13	ВО-21-210КБ-12,5ДУ-6	АИР160М6	950	15
14	ВО-21-210КА-16ДУ-8	АИР200М8	950	18,5
15	ВО-21-210КБ-16ДУ-8	АИР225М8	950	30

Manufactured in accordance with TU 4861-007-64600223-13

2400 – 120000 m³/hour

ВО-21-210 ДУ (VO-21-210 DU) fans are equipped with axial impellers directly driven from industrial induction motor.

Some fans are allowed to be applied in the general ventilation mode providing rotation speed decrease by at least 25% against value specified in the catalogue (for instance, using frequency converter). Application shall be agreed with manufacturer.

Explosion-proof version is available.

Fans are denoted as follows:

ВО 21-210 А- 6,3 В ДУ 400 - 4 - У2

- У2 — Climatic version;
- 4 — Number of motor poles;
- 400 — Maximum temperature of handled medium;
- ДУ — Designation code (smoke removal);
- В — Enclosure type (explosion proof);
- 6,3 — Impeller diameter in decimeters;
- А — Impeller design: А-4; Б-6;
- 21-210 — Aerodynamic configuration index;
- ВО — Fan Type (axial fan).

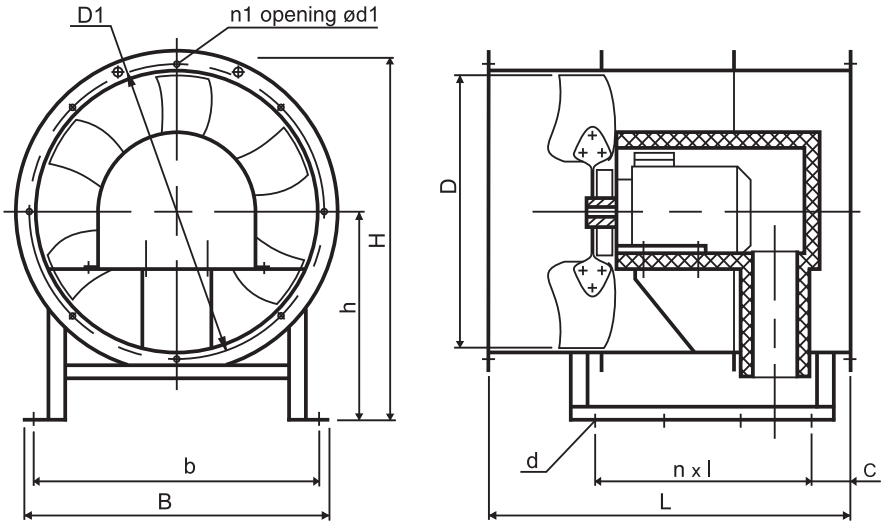

№	Fan Type	Dimensions [mm]													Weight [kg]
		D	D1	d	d1	B	b	H	h	L	l	C	n	n1	
1	ВО-21-210Б-4ДУ-4	400	430	13	7	455	300	520	290	430	300	65	---	8	30
2	ВО-21-210А-5ДУ-4	500	530	13	7	555	490	640	360	570	170	70	2	10	55
3	ВО-21-210Б-5ДУ-4	500	530	13	7	555	490	640	360	570	170	70	2	10	55
4	ВО-21-210А-6,3ДУ-4	630	680	18	10	690	630	785	440	700	200	85	2	12	95
5	ВО-21-210Б-6,3ДУ-4	630	680	18	10	690	630	785	440	700	200	85	2	12	95
6	ВО-21-210А-8ДУ-4	800	850	18	10	860	760	993	560	900	260	75	2	12	160
7	ВО-21-210Б-8ДУ-4	800	850	18	10	860	760	993	560	900	260	75	2	12	160
8	ВО-21-210А-10ДУ-6	1000	1055	18	10	1072	910	1198	660	1100	240	105	3	16	260
9	ВО-21-210Б-10ДУ-6	1000	1055	18	10	1072	910	1198	660	1100	240	105	3	16	260
10	ВО-21-210А-12,5ДУ-8	1250	1310	18	12	1332	1180	1495	830	1400	310	115	3	18	415
11	ВО-21-210Б-12,5ДУ-8	1250	1310	18	12	1332	1180	1495	830	1400	310	115	3	18	415
12	ВО-21-210А-12,5ДУ-6	1250	1310	18	12	1332	1180	1495	830	1400	310	115	3	18	415
13	ВО-21-210Б-12,5ДУ-6	1250	1310	18	12	1332	1180	1495	830	1400	310	115	3	18	415
14	ВО-21-210А-16ДУ-8	1600	1675	22	12	1692	1550	1890	1050	1800	400	160	3	26	690
15	ВО-21-210Б-16ДУ-8	1600	1675	22	12	1692	1550	1890	1050	1800	400	160	3	26	690

CHARACTERISTICS SUMMARY DIAGRAM

2400 – 30000 m³/hour

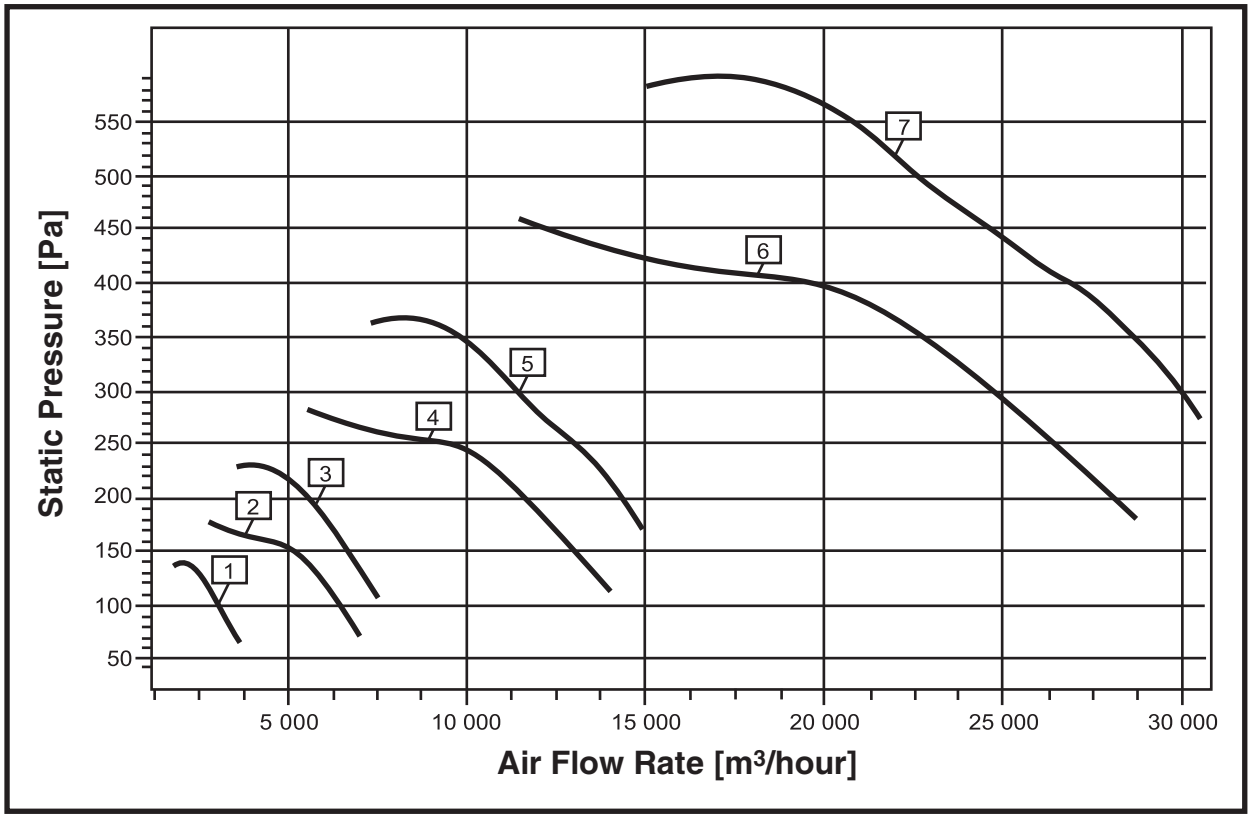

№	Fan Type	Electric Motor Type	Frequency n [min^{-1}]	Power N_y [kW]
1	ВО-21-210Б-4ДУ-4	АИР63А4	1450	0,25
2	ВО-21-210А-5ДУ-4	АИР71А4	1450	0,55
3	ВО-21-210Б-5ДУ-4	АИР71А4	1450	0,55
4	ВО-21-210А-6,3ДУ-4	АИР80В4	1450	1,5
5	ВО-21-210Б-6,3ДУ-4	АИР90L4	1450	2,2
6	ВО-21-210А-8ДУ-4	АИР100L4	1450	4
7	ВО-21-210Б-8ДУ-4	АИР112М4	1450	5,5

CHARACTERISTICS SUMMARY DIAGRAM

18000 – 120000 m³/hour

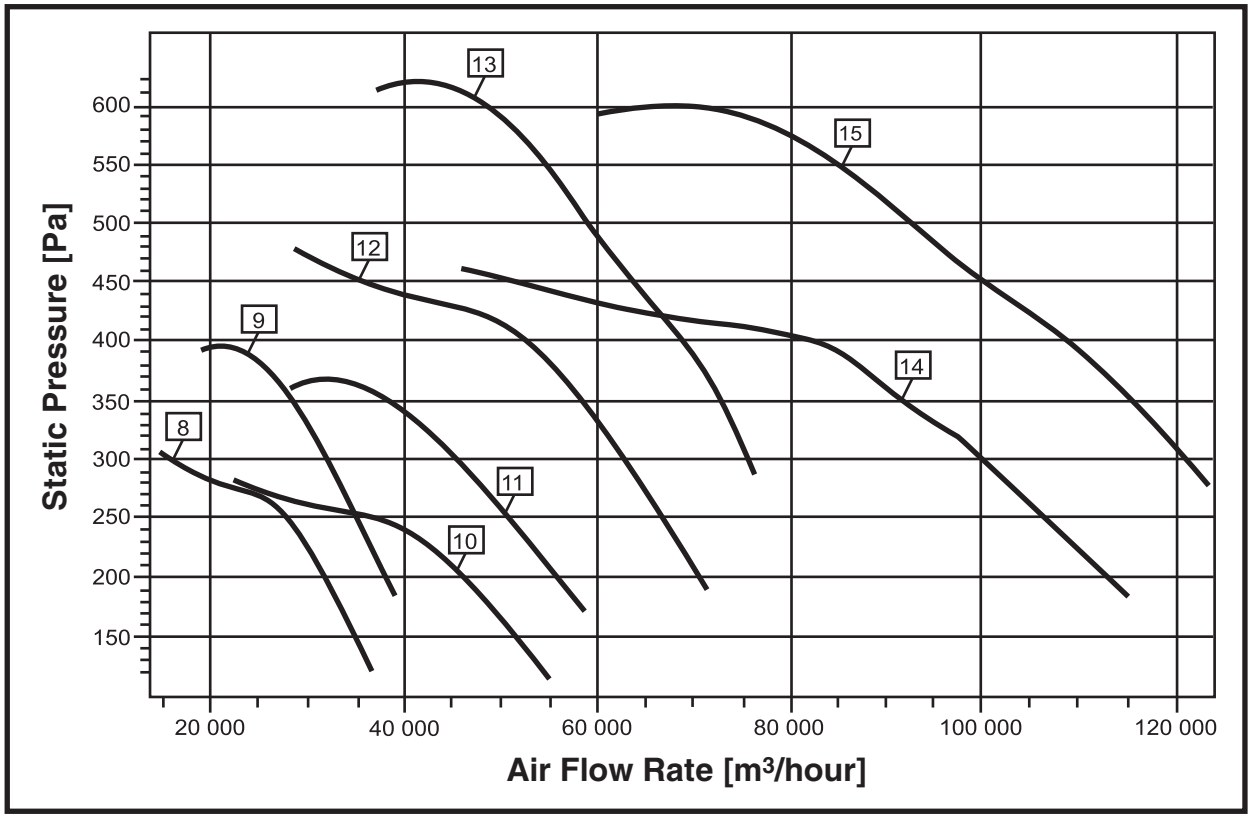

№	Fan Type	Electric Motor Type	Frequency n [min^{-1}]	Power N_y [kW]
8	ВО-21-210А-10ДУ-6	АИР112МВ6	950	4
9	ВО-21-210Б-10ДУ-6	АИР132S6	950	5,5
10	ВО-21-210А-12,5ДУ-8	АИР132М8	730	5,5
11	ВО-21-210Б-12,5ДУ-8	АИР160S8	730	7,5
12	ВО-21-210А-12,5ДУ-6	АИР160S6	950	11
13	ВО-21-210Б-12,5ДУ-6	АИР160М6	950	15
14	ВО-21-210А-16ДУ-8	АИР200М8	730	18,5
15	ВО-21-210Б-16ДУ-8	АИР225М8	730	30

Manufactured in accordance with TU 4861-018-64600223-13

500 – 49000 m³/hour

- ◆ pImpeller with backward-curved blades;
- ◆ Powder coating of basic assemblies.

Low energy consumption.

Some fans are admitted to operate in the general ventilation mode at the speed decreased by at least 25% against specified in the catalog (for example, using frequency converter). Application capabilities are to be agreed with the manufacturer.

ВРП-ДУ-С (VRP-DU-S) fans are fitted with exhaust connection providing jet velocity at the fan outlet of no less than 20 m/s.

Mountable both indoor and outdoor.

Impellers with high aerodynamic load.

Explosion-proof version is available.

Fans are denoted as follows:

ВРП - А - 3,15 В ДУ 400 - 01 С Пр - 4 - У1

- Climatic version;
- Number of motor poles (2, 4, 6, or 8);
- Air inlet arrangement with reference to the exhaust connection: Н – against; Пр – to the right; Лев – to the left;
- Spiral case;
- Modification index number: 01 – air inlet + thermo-insulated housing; 02 – thermally insulated housing only; 03 – Sir inlet only;
- Maximum temperature of the handled medium;
- Application code (smoke exhaustion);
- Special enclosure type (explosion-proof);
- Impeller diameter in decimeters;
- Power index (А or Б);
- Fan type (Wall-mounted radial fan).

Floor-mounted version is optionally available.

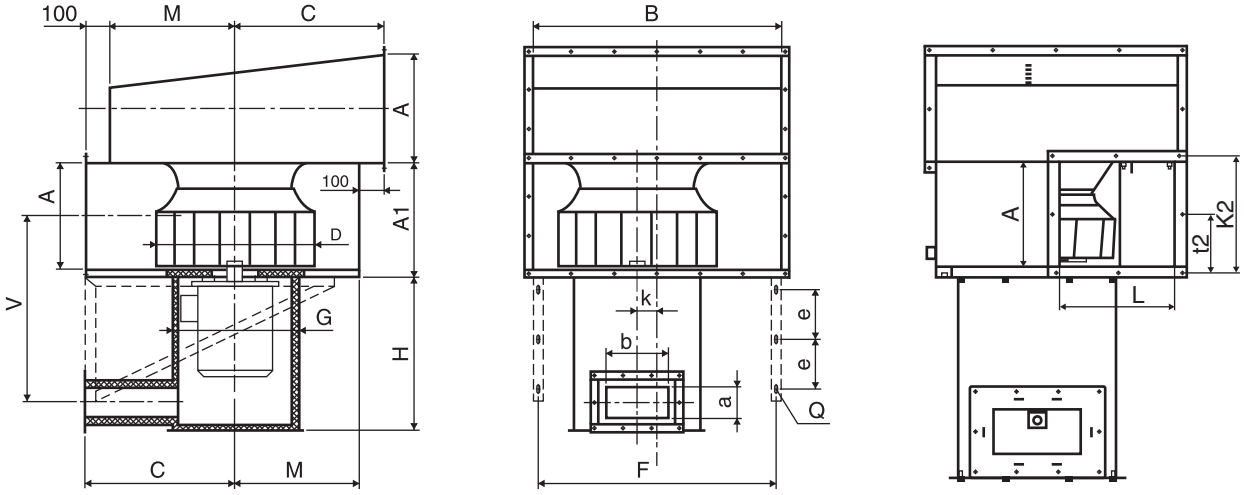

№	Fan Type	Dimensions [mm]																		
		D	A	B	A1	C	M	G	H	V	F	a	b	e	Q	k	W	E	L	H1*
1	ВРП-А/Б-3,15ДУ-4	315	220	500	247	350	250	280	350	371	460	80	160	125	10x20	40	245	245	245	195/200
2	ВРП-А/Б-3,55ДУ-4	355	245	560	272	380	280	367	465	508	520	100	200	125	10x20	43	270	275	270	200/260
3	ВРП-А/Б-4ДУ-4	400	275	630	302	415	315	367	465	523	590	100	200	150	12x30	48	300	310	300	260/260
4	ВРП-А/Б-4,5ДУ-4	450	310	710	337	455	355	367	465	540	670	100	200	150	12x30	55	345	345	340	250/270
5	ВРП-А/Б-5ДУ-4	500	340	800	374	500	400	412	525	600	760	125	250	175	12x30	66	375	380	375	270/320
6	ВРП-А/Б-5,6ДУ-4	560	380	900	414	550	450	512	635	728	860	125	250	200	12x30	76	420	425	420	320/360
7	ВРП-А/Б-6,3ДУ-6	630	430	1000	464	600	500	512	635	753	960	125	250	200	12x30	80	480	480	475	320/350
8	ВРП-А/Б-6,3ДУ-4	630	430	1000	464	600	500	512	635	753	960	125	250	200	12x30	80	480	480	475	390/420
9	ВРП-А/Б-7,1ДУ-6	710	500	1125	534	662	562	642	760	909	1085	140	315	225	14x30	90	550	560	550	390/390
10	ВРП-А/Б-7,1ДУ-4	710	500	1125	534	662	562	642	760	909	1085	140	315	225	14x30	90	550	560	550	420/571
11	ВРП-А-8ДУ-8	800	560	1250	594	725	625	722	840	1017	1210	140	315	225	14x30	90	620	625	620	380
12	ВРП-А/Б-8ДУ-6	800	560	1250	594	725	625	722	840	1017	1210	140	315	225	14x30	90	620	625	620	430/480
13	ВРП-А/Б-8ДУ-4	800	560	1250	594	725	625	722	840	1017	1210	140	315	225	14x30	90	620	625	620	550/580

* Dimensions are reference only

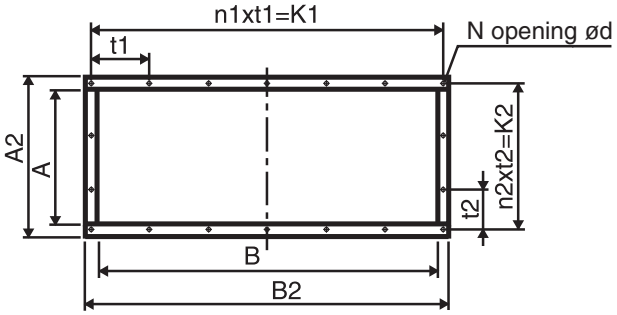

Fig. 1. Air Inlet and Outlets

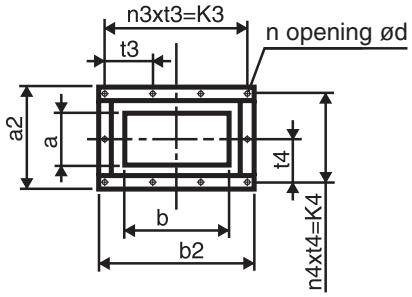

Fig. 2. Cooling Air Inlet

№	Fan Type	Dimensions [mm], See Fig. 1												Dimensions [mm], See Fig. 2											
		A	B	A2	B2	t1	t2	N	n1	n2	K1	K2	d	a	b	a2	b2	t3	t4	n	n3	n4	K3	K4	d1
1	ВРП-А/Б-3,15ДУ	220	500	270	550	132,5	125	12	4	2	530	250	8	80	160	188	268	82,5	84	10	3	2	247,5	168	8
2	ВРП-А/Б-3,55ДУ	245	560	295	610	147,5	137,5	12	4	2	590	275	8	100	200	208	308	96	94	10	3	2	288	188	8
3	ВРП-А/Б-4ДУ	275	630	325	680	132	152,5	14	5	2	660	305	8	100	200	208	308	96	94	10	3	2	288	188	8
4	ВРП-А/Б-4,5ДУ	310	710	360	760	148	113	16	5	3	740	339	8	100	200	208	308	96	94	10	3	2	288	188	8
5	ВРП-А/Б-5ДУ	340	800	390	850	166	123	16	5	3	830	369	8	125	250	247	372	116	111,5	10	3	2	348	223	10
6	ВРП-А/Б-5,6ДУ	380	900	444	964	156,5	139	18	6	3	939	417	10	125	250	247	372	116	111,5	10	3	2	348	223	10
7	ВРП-А/Б-6,3ДУ	430	1000	494	1064	173	156	18	6	3	1038	468	10	125	250	247	372	116	111,5	10	3	2	348	223	10
8	ВРП-А/Б-7,1ДУ	500	1125	564	1189	166	179	20	7	3	1162	537	10	140	315	262	437	137	118	10	3	2	411	236	10
9	ВРП-А/Б-8ДУ	560	1250	624	1314	184	199	20	7	3	1288	597	10	140	315	262	437	137	118	10	3	2	411	236	10

VRP DU Fan Positioning Options (Wall-Mounted Configuration)

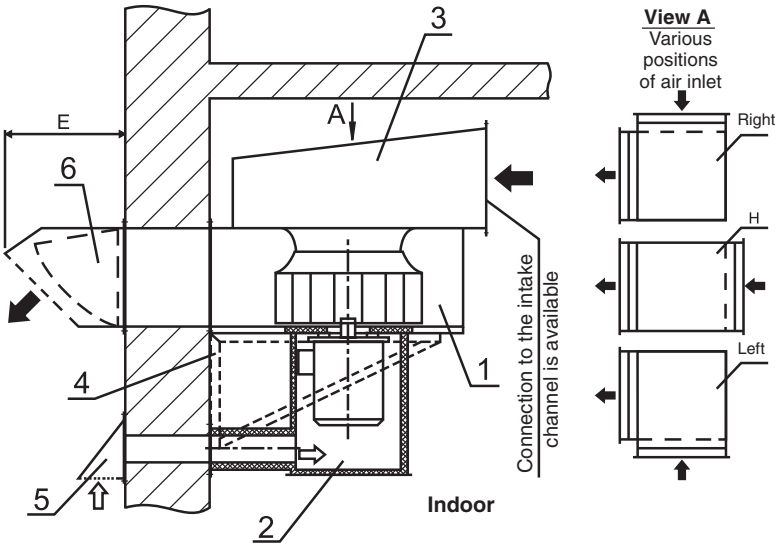

Configuration 01

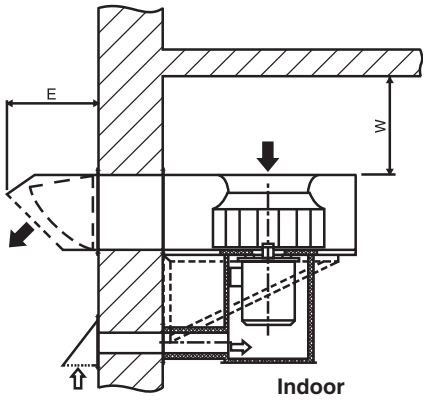

Configuration 02

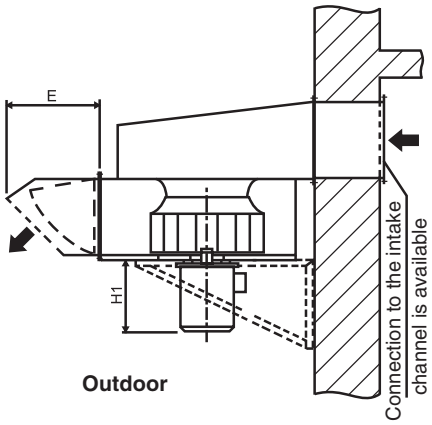

Configuration 03

Main Configuration:
1 – Housing
2 – Thermally insulated cover
3 – Air inlet (in version 01, 03)

Accessories (see page 167):
4 – Mounting brackets
5 – Outdoor air hood
6 – Masked inlet damper

CHARACTERISTICS SUMMARY DIAGRAM

500 – 41000 m³/hour

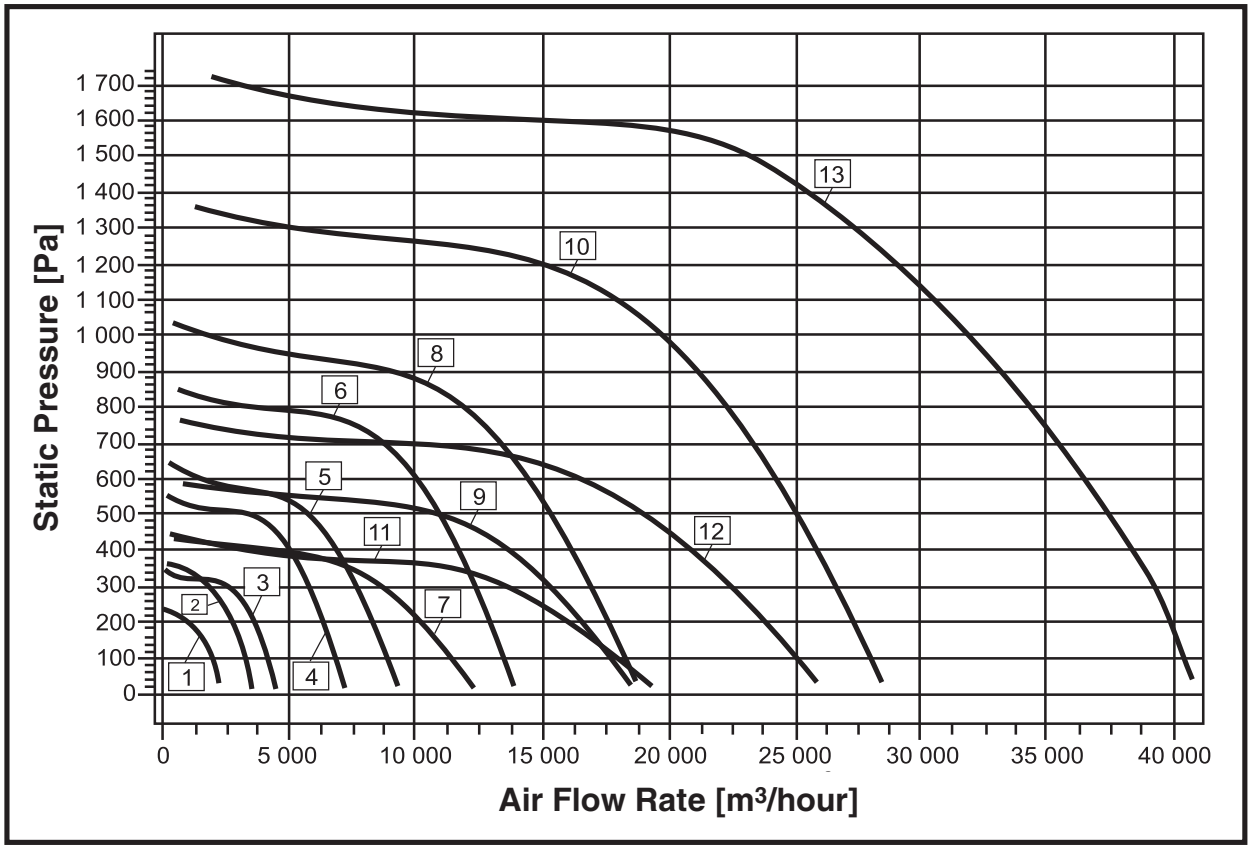

No.	Fan Model	Motor			Capacity Rating [m³/hour]	Fan Weight [kg]
		Type	Rotation Speed [rpm]	Power [kW]		
1	ВРП-А-3,15ДУ-4	АИР56В4	1450	0,18	2000	57
2	ВРП-А-3,55ДУ-4	АИР63В4	1450	0,37	4000	70
3	ВРП-А-4ДУ-4	АИР71А4	1450	0,55	4800	100
4	ВРП-А-4,5ДУ-4	АИР80А4	1450	1,1	7000	130
5	ВРП-А-5ДУ-4	АИР80В4	1450	1,5	9000	164
6	ВРП-А-5,6ДУ-4	АИР100S4	1450	3	14000	225
7	ВРП-А-6,3ДУ-6	АИР90L6	950	1,5	12000	240
8	ВРП-А-6,3ДУ-4	АИР112М4	1450	5,5	18000	265
9	ВРП-А-7,1ДУ-6	АИР112МА6	950	3	17500	345
10	ВРП-А-7,1ДУ-4	АИР132М4	1450	11	38000	380
11	ВРП-А-8ДУ-8	АИР112МА8	710	2,2	19000	480
12	ВРП-А-8ДУ-6	АИР132S6	950	5,5	25000	490
13	ВРП-А-8ДУ-4	АИР160S4	1450	15	40000	540

Notes:
1) Fan weight values are specified for configuration with air inlet and thermally insulated housing (weights of mounting brackets are not considered. Weight is specified for reference only.

CHARACTERISTICS SUMMARY DIAGRAM

1000 – 49000 m³/hour

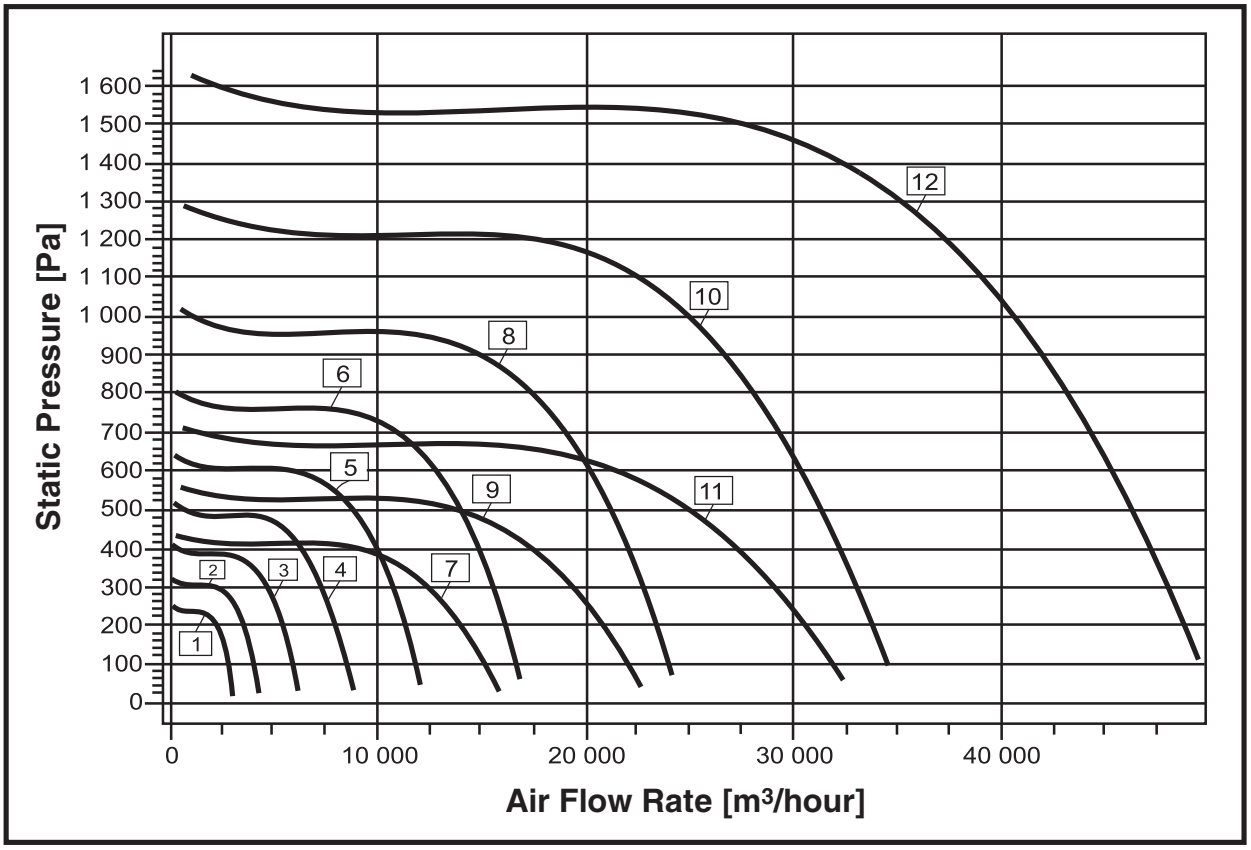

No.	Fan Model	Motor				Fan Weight [kg]
		Type	Rotation Speed [rpm]	Power [kW]	apacity Rating [m³/hour]	
1	ВРП-Б-3,15ДУ-4	АИР63В4	1450	0,37	2600	60
2	ВРП-Б-3,55ДУ-4	АИР71А4	1450	0,55	4500	75
3	ВРП-Б-4ДУ-4	АИР71В4	1450	0,75	6000	115
4	ВРП-Б-4,5ДУ-4	АИР80В4	1450	1,5	8500	150
5	ВРП-Б-5ДУ-4	АИР90L4	1450	2,2	12000	180
6	ВРП-Б-5,6ДУ-4	АИР100L4	1450	4	16000	235
7	ВРП-Б-6,3ДУ-6	АИР100L6	950	2,2	15500	255
8	ВРП-Б-6,3ДУ-4	АИР132S4	1450	7,5	24000	295
9	ВРП-Б-7,1ДУ-6	АИР112МВ6	950	4	22000	345
10	ВРП-Б-7,1ДУ-4	АИР160S4	1450	15	34000	425
11	ВРП-Б-8ДУ-6	АИР132М6	950	7,5	32000	510
12	ВРП-Б-8ДУ-4	АИР180S4 АИР180М4	1450 1450	22 30	35000 48000	590 620

Notes:
1) Fan weight values are specified for configuration with air inlet and thermally insulated housing (weights of mounting brackets are not considered. Weight is specified for reference only.

Manufactured in accordance with TU 4861-005-64600223-12

800 – 65000 m³/hour

VR-80-70 DU fans are equipped with radial impellers with backward-curved blades directly driven from industrial three-phase induction motor.

Some fans are allowed to be applied in the general ventilation mode providing rotation speed decrease by at least 25% against value specified in the catalogue (for instance, using frequency converter). Application shall be agreed with manufacturer.

Explosion-proof version is available.

Fans are denoted as follows:

ВР - 80 - 70 - 6,3 В ДУ400 - 01 - ПР90° У2

- У2 – Climatic version;
- ПР90° – Rotating direction and housing positioning;
- 01 – Modification index number;
- 400 – Maximum temperature of the handled medium;
- ДУ – Application code (smoke exhaustion)
- В – Designation code (smoke removal);
- 6,3 – Enclosure type (explosion proof);
- 70 – Aerodynamic configuration index
- ВР – Fan Type (radial fan).

It is allowed operating fans according to the first category of location provided special appliances and motor weather protection (see pp.169-170).

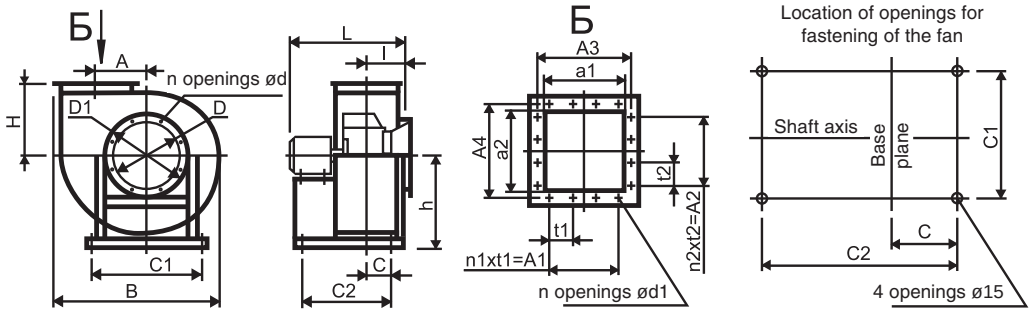

View from suction side

Right-hand rotation:

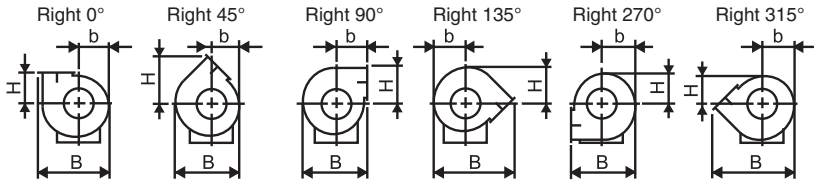

Left-hand rotation:

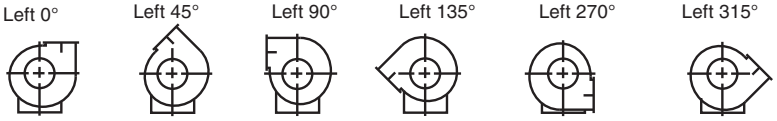

Fan Type	Dimensions [mm]																					
	h	l	L_{max}	A	D	D1	d	d1	a1	a2	A1	A2	A3	A4	t1	t2	C	C1	C2	N	n	n1	n2
ВР-80-70-2,5ДУ	320	132	625	162	250	274	7	7	175		100		205		100		113	280	514	8	8	1	1
ВР-80-70-2,8ДУ	350	150	545	182	280	300	7	7	196		100		230		100		123	500	500	8	8	1	2
ВР-80-70-3,15ДУ	410	162	625	205	315	345	7	7	221		200		255		100		316	220	400	8	8	2	2
ВР-80-70-3,55ДУ	430	430	670	230	355	385	7	7	248		200		280		100		95	350	500	8	12	2	2
ВР-80-70-4ДУ	520	190	820	260	400	430	7	7	280		200		310		100		165	350	640	8	12	2	2
ВР-80-70-4,5ДУ	464	207	790	292	450	480	7	7	315		200		350		100		192	410	750	8	12	2	2
ВР-80-70-5ДУ	650	225	830	324	500	530	7	7	350		300		380		100		95	410	900	8	12	3	3
ВР-80-70-5,6ДУ	640	640	860	364	560	590	7	7	392		300		425		100		136	410	600	8	12	3	3
ВР-80-70-6,3ДУ	720	300	1000	409	630	660	7	7	447		400		470		100		285	480	900	16	16	4	4
ВР-80-70-7,1ДУ	800	302	1100	462	710	740	7	7	497		300		540		150		205	550	900	16	16	2	2
ВР-80-70-8ДУ	905	378	1500	520	800	830	10	10	560		600		600		150		229	610	1050	16	16	4	4
ВР-80-70-9ДУ	1000	258	1250	589	900	940	10	10	630		450		670		150		242	620	1000	16	16	3	3
ВР-80-70-10ДУ	1130	433	1440	650	1000	1040	12	12	704		750		750		150		360	840	1260	24	20	4	4
ВР-80-70-11,2ДУ	1250	445	1610	728	1120	1165	12	12	784		600		840		150		302	620	1300	24	20	4	4
ВР-80-70-12,5ДУ	1350	542	1690	813	1250	1295	12	12	875		750		930		150		267	1260	1350	24	24	5	5

Fan Type	Position																	
	Rt0°, Lt0°			Rt45°, Lt45°			Rt90°, Lt90°			Rt135°, Lt135°			Rt270°, Lt270°			Rt315°, Lt315°		
	B	b	H	B	b	H	B	b	H	B	b	H	B	b	H	B	b	H
ВР-80-70-2,5ДУ	465	189	198	408	173	335	417	220	276	535	204	235	417	219	189	539	204	173
ВР-80-70-2,8ДУ	735	217	200	469	200	359	459	201	307	594	235	270	459	259	217	594	235	200
ВР-80-70-3,15ДУ	410	238	293	515	218	413	516	277	342	670	258	297	516	277	238	670	258	218
ВР-80-70-3,55ДУ	655	273	255	591	251	450	573	255	382	746	296	340	573	317	273	746	296	340
ВР-80-70-4ДУ	735	307	292	633	282	510	648	292	428	840	332	382	648	307	307	840	332	280
ВР-80-70-4,5ДУ	822	344	313	744	316	560	713	313	292	932	372	428	713	400	344	932	372	316
ВР-80-70-5ДУ	915	389	340	940	357	612	790	454	526	1032	420	376	790	454	389	1032	420	357
ВР-80-70-5,6ДУ	1015	427	390	923	392	690	885	390	364	1152	462	531	885	496	426	1152	462	531
ВР-80-70-6,3ДУ	1143	487	420	1052	447	760	985	564	656	1286	526	605	985	564	487	1286	526	447
ВР-80-70-7,1ДУ	1280	538	476	1164	493	862	1102	476	744	1444	582	671	1102	626	538	1444	582	493
ВР-80-70-8ДУ	1450	614	533	1328	564	965	1247	714	836	1629	664	764	1247	714	614	1629	664	564
ВР-80-70-9ДУ	1590	628	612	1476	626	1092	1405	612	934	1830	738	850	1405	495	682	1830	738	626
ВР-80-70-10ДУ	1130	762	646	1642	695	1191	1525	892	1044	2012	820	951	1528	892	764	2012	821	695
ВР-80-70-11,2ДУ	2015	848	733	1835	777	1344	1720	733	1167	2260	918	1058	1720	708	848	2260	918	777
ВР-80-70-12,5ДУ	1350	952	800	2060	880	1490	1908	1116	1294	2520	1030	1180	1908	1116	952	2520	1030	880

CHARACTERISTICS SUMMARY DIAGRAM

800 – 7800 m³/hour

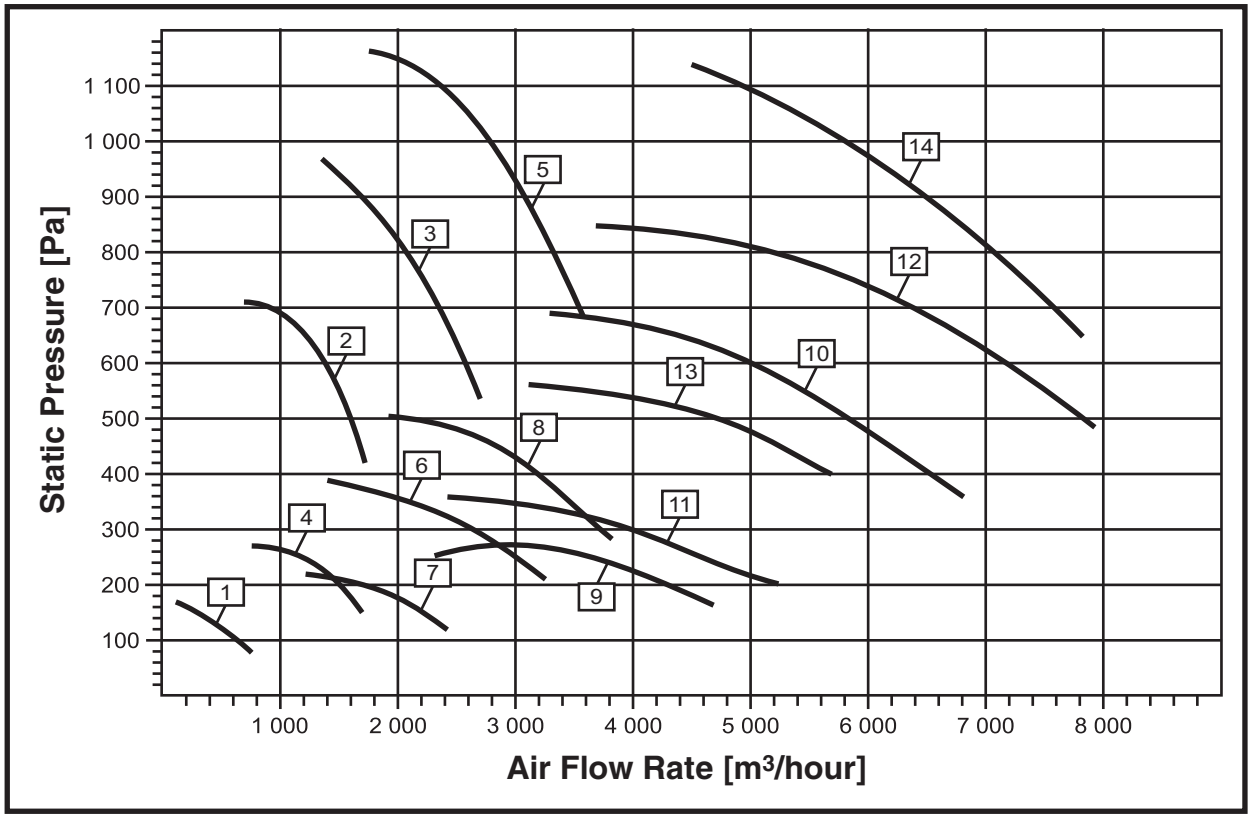

No.	Fan Model	No. of Modification	Motor			Fan Weight [kg]
			Type	Rotation Speed [rpm]	Power [kW]	
1	ВР-80-70-2,5ДУ	00	АИР56А4	1450	0,12	30
2		01	АИР63В2	2950	0,55	30
3	ВР-80-70-2,8ДУ	00	АИР71А2	2950	0,25	33
4	ВР-80-70-3,15ДУ	00	АИР56В4	1450	0,18	36
5		01	АИР80А2	2950	1,5	40
6	ВР-80-70-3,55ДУ	00	АИР63А4	1450	0,25	45
7	ВР-80-70-4ДУ	00	АИР63А6	950	0,18	52
8		01	АИР71А4	1450	0,55	55
9	ВР-80-70-4,5ДУ	00	АИР63В6	950	0,25	56
10		01	АИР71В2	1450	1,1	60
11	ВР-80-70-5ДУ	00	АИР71В6	950	0,55	92
12		01	АИР90L4	1450	2,2	107
13	ВР-80-70-5,6ДУ	00	АИР80А6	950	0,75	116
14		01	АИР100S4	1450	3	135

Notes:
1) Aerodynamic performance of ВР-80-70 ….ДУ fans shall be selected in accordance with the table above
2) Weight is specified for reference only.

CHARACTERISTICS SUMMARY DIAGRAM

5500 – 65000 m³/hour

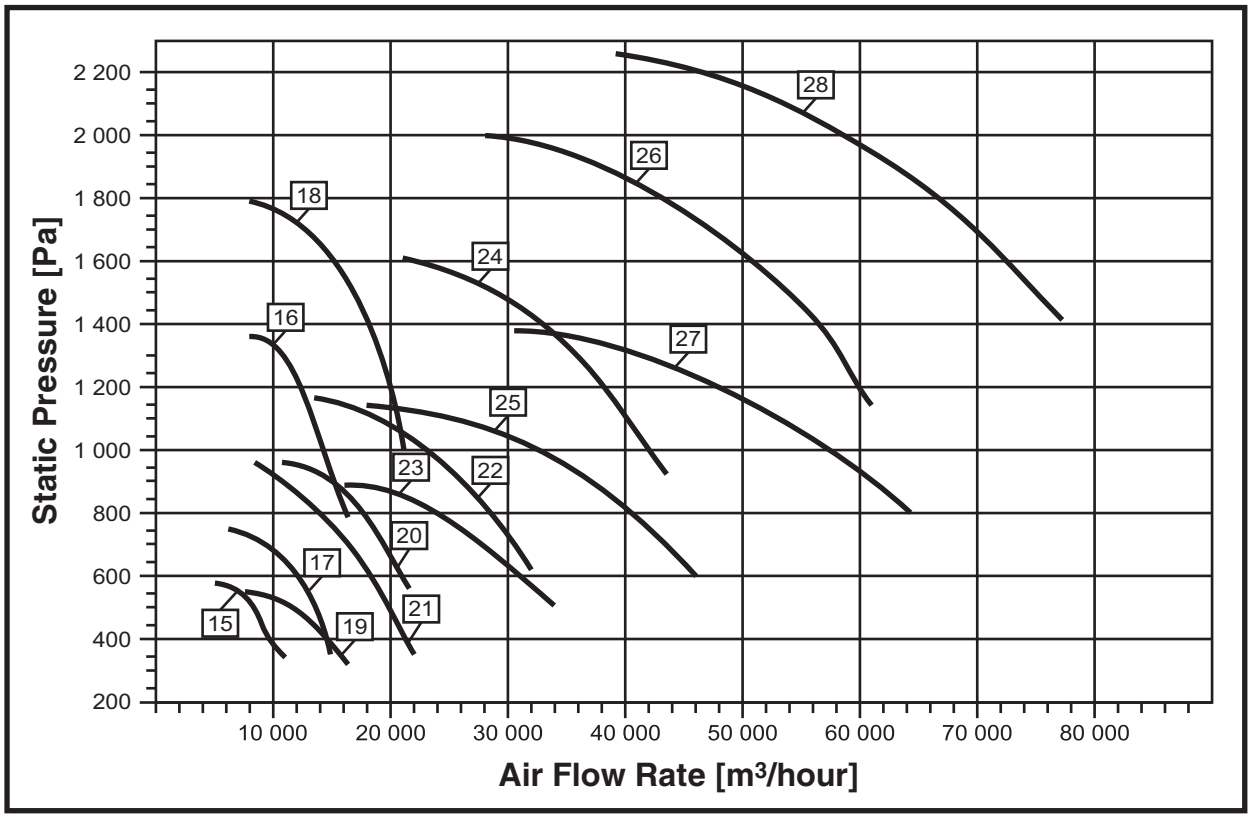

No.	Fan Model	No. of Modification	Motor			Fan Weight [kg]
			Type	Rotation Speed [rpm]	Power [kW]	
15	ВР-80-70-6,3ДУ	00	АИР100L6	950	2,2	162
16		01	АИР112М4	1450	5,5	179
17	ВР-80-70-7,1ДУ	00	АИР112МА6	950	3	205
18		01	АИР132М4	1450	11	225
19	ВР-80-70-8ДУ	00	АИР112МВ8	730	3	252
20		01	АИР132S6	950	5,5	277
21	ВР-80-70-9ДУ	00	АИР132S8	730	4	460
22		01	АИР160S6	950	11	410
23	ВР-80-70-10ДУ	00	АИР160S8	730	7,5	600
24		01	АИР180М6	950	18,5	680
25	ВР-80-70-11,2ДУ	00	АИР180М8	730	15	880
26		01	АИР200L6	950	30	790
27	ВР-80-70-12,5ДУ	00	АИР200L8	730	22	950
		01	АИР225М8	730	30	1000
28		02	АИР250S6	950	45	1100

Notes:
1) Aerodynamic performance of ВР-80-70 ….ДУ fans shall be selected in accordance with the table above
2) Weight is specified for reference only.

Manufactured in accordance with TU 4861-005-64600223-12

3000 – 52000 m³/hour

ВР-280-46 ДУ (VR-280-46 DU) fans are equipped with radial impellers with forward-curved blades directly actuated by general purpose industrial-grade three-phase induction motors.

Some fans are allowed to be applied in the general ventilation mode providing rotation speed decrease by at least 25% against value specified in the catalogue (for instance, using frequency converter). Application shall be agreed with manufacturer.

Explosion-proof version is available.

It is allowed operating fans according to the first category of location provided special appliances and motor weather protection (see pp.169-170).

Fans are denoted as follows:

ВР - 280 - 46 - 6,3 В ДУ 400 - 01 - ПР90° - У2

- У2 – Climatic version;
- ПР90° – Rotating direction and housing positioning;
- 01 – Modification index number;
- 400 – Maximum temperature of the handled medium;
- ДУ – Application code (smoke exhaustion);
- В – Enclosure type (explosion proof);
- 6,3 – Impeller diameter in decimeters;
- 46 – Aerodynamic configuration index;
- ВР – Fan Type (radial fan).

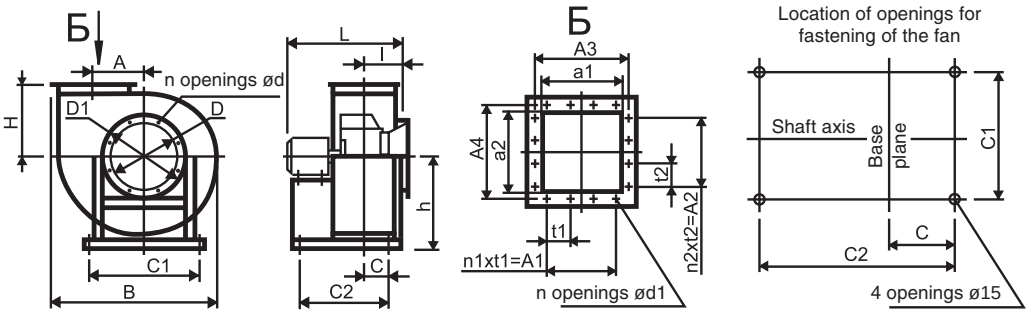

View from suction side

Right-hand rotation:

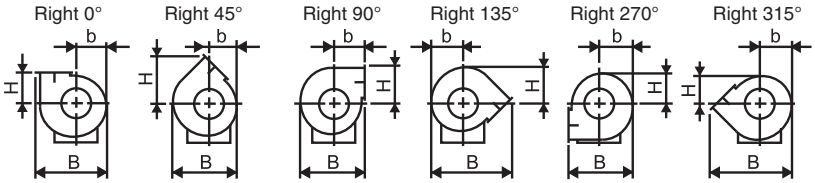

Left-hand rotation:

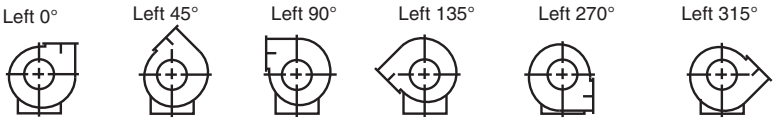

Fan Type	Dimensions [mm]																						
	h	l	L_{max}	A	D	D1	d	d1	a1	a2	A1	A2	A3	A4	t1	t2	C	C1	C2	N	n	n1	n2
ВР-280-46-2,5ДУ	320	132	625	162	250	274	7	7	175		100		205		100		113	280	514	8	8	1	1
ВР-280-46-2,8ДУ	350	150	545	182	280	300	7	7	196		100		230		100		123	500	500	8	8	1	2
ВР-280-46-3,15ДУ	410	162	625	205	315	345	7	7	221		200		255		100		316	220	400	8	8	2	2
ВР-280-46-3,55ДУ	430	430	670	230	355	385	7	7	248		200		280		100		95	350	500	8	12	2	2
ВР-280-46-4ДУ	520	190	820	260	400	430	7	7	280		200		310		100		165	350	640	8	12	2	2
ВР-280-46-4,5ДУ	464	207	790	292	450	480	7	7	315		200		350		100		192	410	750	8	12	2	2
ВР-280-46-5ДУ	650	225	830	324	500	530	7	7	350		300		380		100		95	410	900	8	12	3	3
ВР-280-46-5,6ДУ	640	640	860	364	560	590	7	7	392		300		425		100		136	410	600	8	12	3	3
ВР-280-46-6,3ДУ	720	300	1000	409	630	660	7	7	447		400		470		100		285	480	900	16	16	4	4
ВР-280-46-7,1ДУ	800	302	1100	462	710	740	7	7	497		300		540		150		205	550	900	16	16	2	2
ВР-280-46-8ДУ	905	378	1500	520	800	830	10	10	560		600		600		150		229	610	1050	16	16	4	4

Fan Type	Position																	
	Rt0°, Lt0°			Rt45°, Lt45°			Rt90°, Lt90°			Rt135°, Lt135°			Rt270°, Lt270°			Rt315°, Lt315°		
	B	b	H	B	b	H	B	b	H	B	b	H	B	b	H	B	b	H
ВР-280-46 -2,5ДУ	465	189	198	408	173	335	417	220	276	535	204	235	417	219	189	539	204	173
ВР-280-46-2,8ДУ	735	217	200	469	200	359	459	201	307	594	235	270	459	259	217	594	235	200
ВР-280-46-3,15ДУ	410	238	293	515	218	413	516	277	342	670	258	297	516	277	238	670	258	218
ВР-280-46-3,55ДУ	655	273	255	591	251	450	573	255	382	746	296	340	573	317	273	746	296	340
ВР-280-46-4ДУ	735	307	292	633	282	510	648	292	428	840	332	382	648	307	307	840	332	280
ВР-280-46-4,5ДУ	822	344	313	744	316	560	713	313	292	932	372	428	713	400	344	932	372	316
ВР-280-46 -5ДУ	915	389	340	940	357	612	790	454	526	1032	420	376	790	454	389	1032	420	357
ВР-280-46-5,6ДУ	1015	427	390	923	392	690	885	390	364	1152	462	531	885	496	426	1152	462	531
ВР-280-46 -6,3ДУ	1143	487	420	1052	447	760	985	564	656	1286	526	605	985	564	487	1286	526	447
ВР-280-46-7,1ДУ	1280	538	476	1164	493	862	1102	476	744	1444	582	671	1102	626	538	1444	582	493
ВР-280-46 -8ДУ	1450	614	533	1328	564	965	1247	714	836	1629	664	764	1247	714	614	1629	664	564

CHARACTERISTICS SUMMARY DIAGRAM

800 – 12000 m³/hour

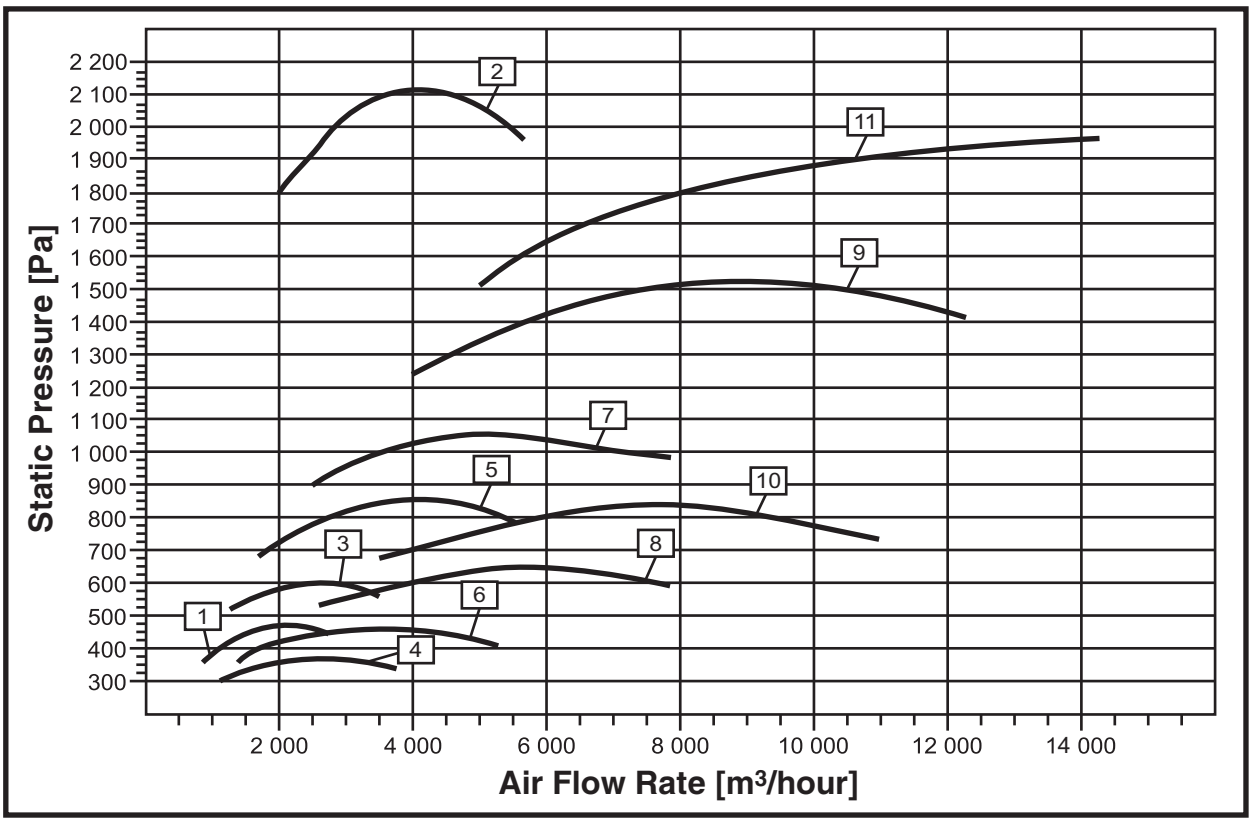

No.	Fan Model	No. of Modification	Motor			Fan Weight [kg]
			Type	Rotation Speed [rpm]	Power [kW]	
1	ВР-280-46-2,5ДУ	00	АИР71А4	1450	0,55	30
2		01	АИР90L2	2950	3	42
		02	АИР100L2	2950	5,5	53
3	ВР-280-46-2,8ДУ	00	АИР80А4	1450	1,1	35
4	ВР-280-46-3,15ДУ	00	АИР80А6	950	0,75	46
		01	АИР80В4	1450	1,5	47
5		02	АИР90L4	1450	2,2	51
6	ВР-280-46-3,55ДУ	00	АИР80В6	950	1,1	52
7		01	АИР100L4	1450	4	60
8	ВР-280-46-4ДУ	00	АИР90L6	950	1,5	71
		01	АИР100L6	950	2,2	78,8
9		02	АИР112М4	1450	5,5	126
		03	АИР132S4	1450	7,5	147
10	ВР-280-46-4,5ДУ	00	АИР112МВ6	950	4	134
11		01	АИР160S4	1450	15	205

Notes:
1) Aerodynamic performance of ВР-280-46 ….ДУ fans shall be selected in accordance with the table above
2) Weight is specified for reference only.

CHARACTERISTICS SUMMARY DIAGRAM

6000 – 52000 m³/hour

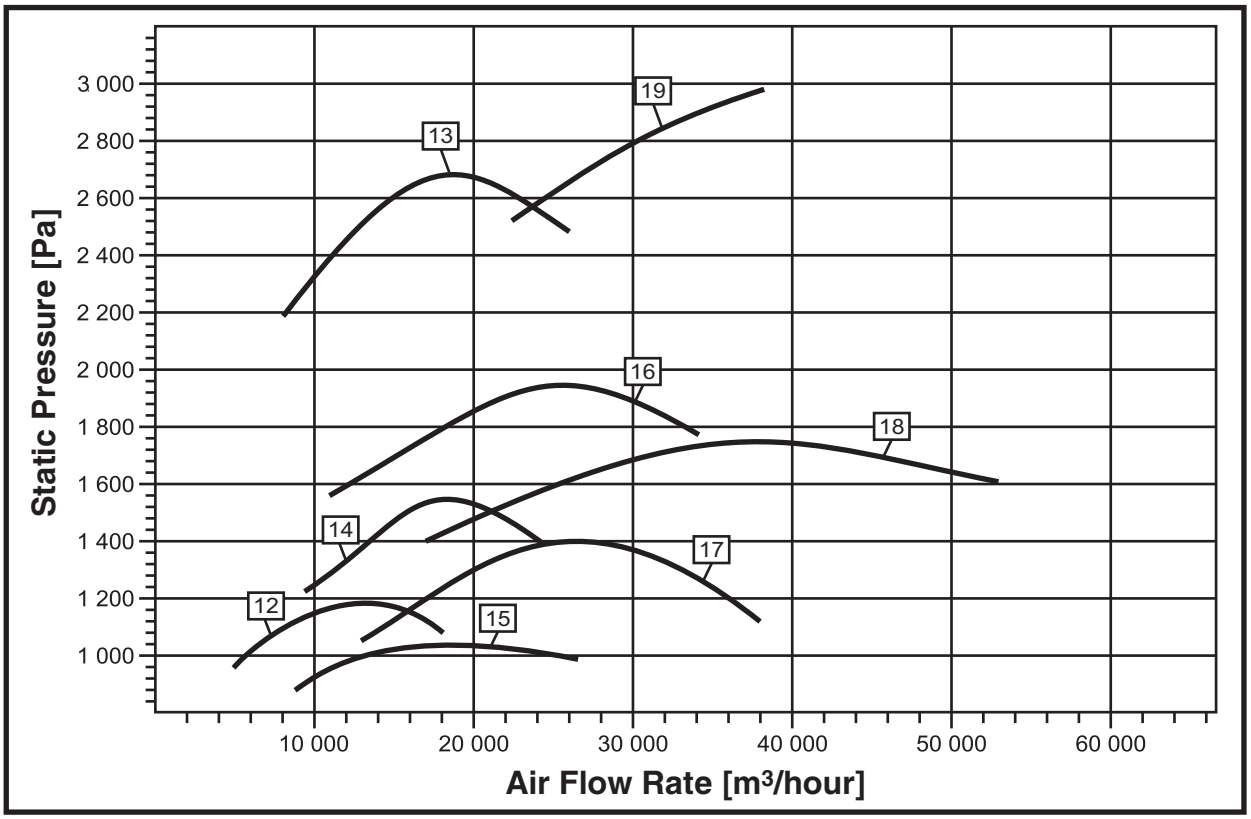

No.	Fan Model	No. of Modification	Motor			Fan Weight [kg]
			Type	Rotation Speed [rpm]	Power [kW]	
12	ВР-280-46-5ДУ	00	АИР132S6	950	5,5	160
		01	АИР132M6	950	7,5	176
13		02	АИР132M4	1450	11	176
		03	АИР160S4	1450	15	218
		04	АИР180S4	1450	22	268
14	ВР-280-46-5,6ДУ	00	АИР160M6	950	15	256
15	ВР-280-46-6,3ДУ	00	АИР132M8	730	5,5	214
		01	АИР132S8	730	7,5	256
		02	АИР160M8	730	11	281
16		03	АИР160M6	950	15	293
		04	АИР200M6	950	22	403
17	ВР-280-46-7,1ДУ	00	АИР200L8	730	22	445
18	ВР-280-46-8ДУ	00	АИР200M8	730	18,5	473
		01	АИР225M8	730	30	558
19		02	АИР250S6	950	45	724

Notes:
1) Aerodynamic performance of ВР-280-46 ….ДУ fans shall be selected in accordance with the table above
2) Weight is specified for reference only

Manufactured in accordance with TU 4861-031-64600223-13

300 – 47000 m³/hour

Fans are designed for moving of air-flue gas mixtures resulting from fire that have a temperature up to 400 °C during 120 minutes and up to 600 °C during 90 minutes.

Explosion-proof and/or corrosion-proof versions are available.

Fans are denoted as follows:

ВЕРС – А Ф – 3,15 В ДУ 400 – 00 – У1

- У1 – Climatic version;
- 00 – Modification index number depending on motor capacity: 00, 01, 02, 03, 04;
- 400 – Maximum temperature of the handled medium C;
- ДУ – Application code (smoke exhaustion);
- В – Design variant: B – Explosion-proof; K – Corrosion-proof; BK – Explosion-proof and Corrosion-proof;
- 3,15 – Impeller diameter in decimeters;
- Ф – Air outlet direction option: sidewards or (Ф) – Vertical air discharge upwards;
- А – Aerodynamic power index (А or Б);
- ВЕРС – Fan type (Radial roof fan).

Design Variants А and Б with Air Discharge Sidewards

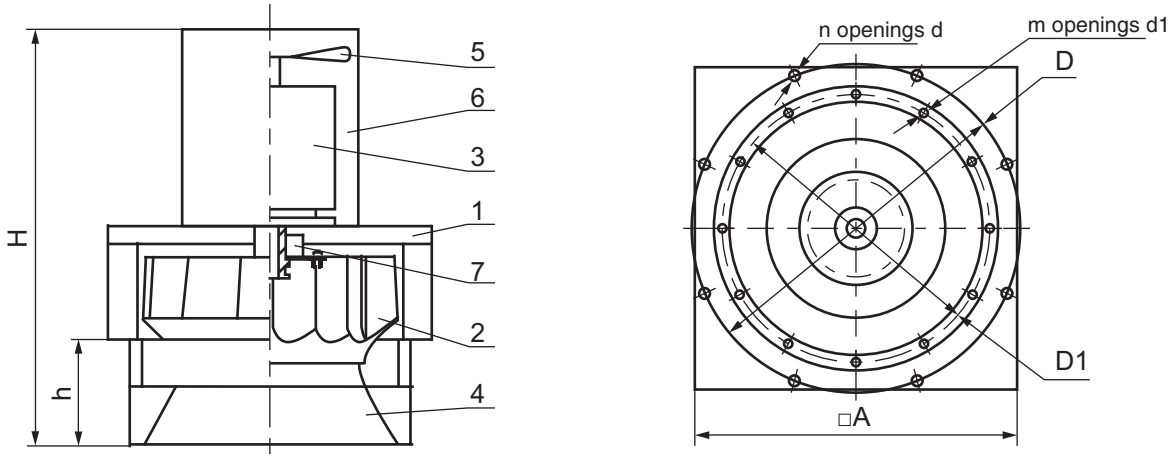

1 – casing; 2 – impeller; 3 – motor; 4 – chamber; 5 – fan blades; 6 – housing; 7 – heat insulation element.

Design Variants АФ and БФ with Vertical Air Discharge Upwards

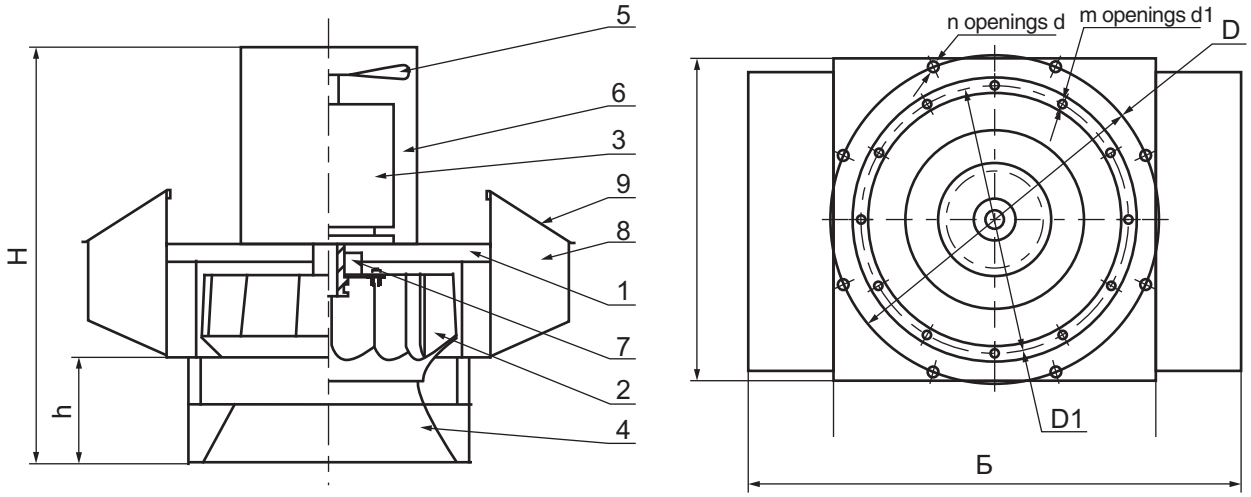

1 – casing; 2 – impeller; 3 – motor; 4 – chamber; 5 – fan blades; 6 – housing; 7 – heat insulation element; 8 – add-ons; 9 – shutters.

Table 1

Fan Model	Dimensions [mm]									
	H	h	A	Б	D	D1	d	d1	n	m
ВЕРС-А-3,15	535	146	470	–	470	345	12			
ВЕРС-АФ-3,15	535	146	470	662						
ВЕРС-Б-3,15	570	146	470	–						
ВЕРС-БФ-3,15	570	146	470	750						
ВЕРС-А-3,55	602	167	560	–	430	560			8	8
ВЕРС-АФ-3,55	602	167	560	776						
ВЕРС-Б-3,55	642	167	560	–						
ВЕРС-БФ-3,55	642	167	560	880						
ВЕРС-А-4	646	180	560	–				8		
ВЕРС-АФ-4	646	180	560	834						
ВЕРС-Б-4	690	180	560	–						
ВЕРС-БФ-4	690	180	560	950						
ВЕРС-А-4,5	720	200	650	–	480	650				10
ВЕРС-АФ-4,5	720	200	650	970						
ВЕРС-Б-4,5	770	200	650	–						
ВЕРС-БФ-4,5	770	200	650	1092						
ВЕРС-А-5	811	222	755	–		530	14			
ВЕРС-АФ-5	811	222	755	1068						
ВЕРС-Б-5	866	222	755	–						
ВЕРС-БФ-5	866	222	755	1222						
ВЕРС-А-5,6	814	202	755	–	772	590				
ВЕРС-АФ-5,6	814	202	755	1246						
ВЕРС-Б-5,6	876	202	755	–						
ВЕРС-БФ-5,6	876	202	755	1386						
ВЕРС-А-6,3	937	230	755	–		660		10	10	12
ВЕРС-АФ-6,3	937	230	755	1246						
ВЕРС-Б-6,3	1007	230	755	–						
ВЕРС-БФ-6,3	1007	230	755	1386						
ВЕРС-А-7,1	1059	353	840	–	800					
ВЕРС-АФ-7,1	1059	353	840	1330						
ВЕРС-Б-7,1	1137	353	840	–						
ВЕРС-БФ-7,1	1137	353	840	1520						
ВЕРС-А-8	1236	370	1080	–	1072	830	18			
ВЕРС-АФ-8	1236	370	1080	1600						
ВЕРС-Б-8	1410	370	1080	–						
ВЕРС-БФ-8	1410	370	1080	1800						

CHARACTERISTICS SUMMARY DIAGRAM

300 – 40000 m³/hour

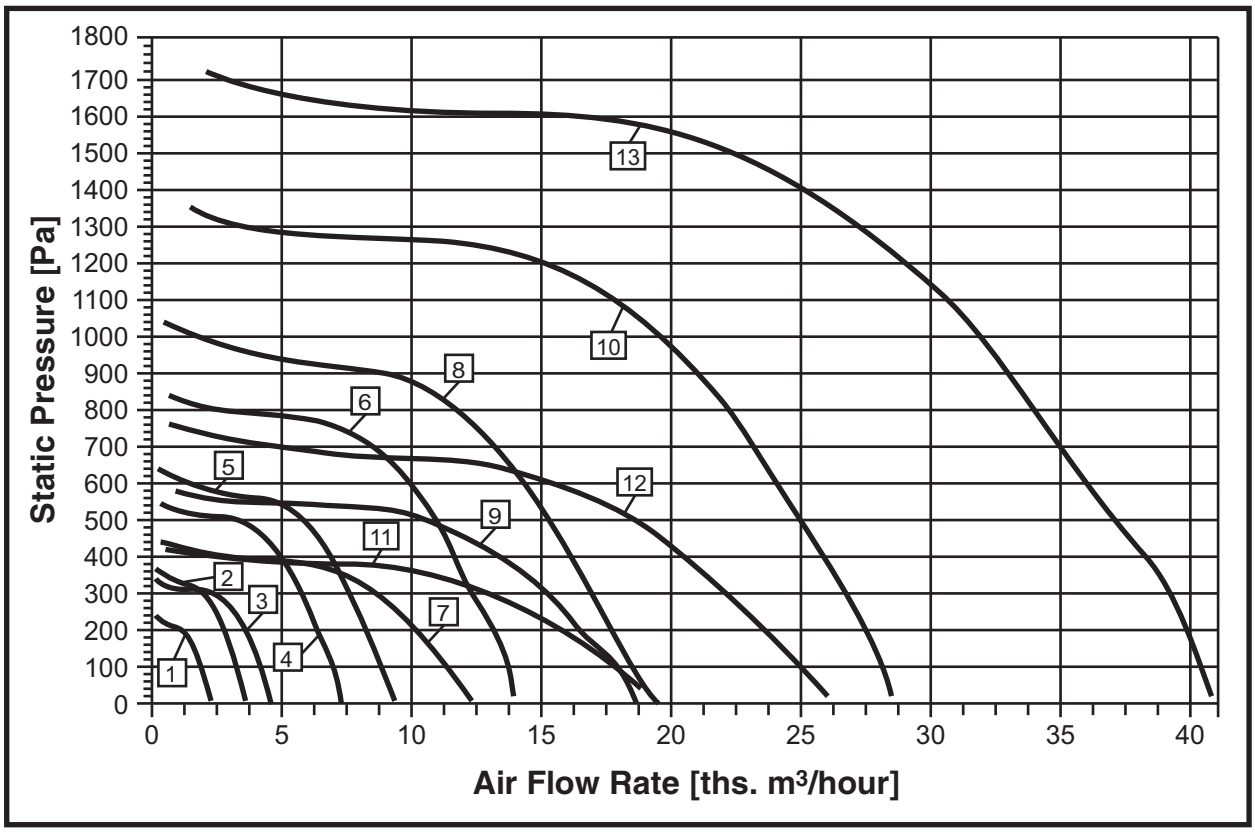

No.	Fan Type	Modification No.	Motor Type		Fan Weight without Motor, max [kg]
			Rotation Speed [rpm]	Power [kW]	
1	ВЕРС-А(Ф)-3,15	00	1450	0,25	42
2	ВЕРС-А(Ф)-3,55	00	1450	0,37	50
3	ВЕРС-А(Ф)-4	00	1450	0,55	70
4	ВЕРС-А(Ф)-4,5	00	1450	1,1	86
5	ВЕРС-А(Ф)-5	00	1450	1,5	110
6	ВЕРС-А(Ф)-5,6	00	1450	3,0	130
7	ВЕРС-А(Ф)-6,3	00	950	1,5	130
8		01	1450	5,5	157
9	ВЕРС-А(Ф)-7,1	00	950	3,0	200
10		01	1450	11	219
11	ВЕРС-А-8	00	730	2,2	310
12		01	950	5,5	350
13		02	1450	18,5	375
12	ВЕРС-АФ-8	00	950	5,5	350
13		01	1450	18,5	375

CHARACTERISTICS SUMMARY DIAGRAM

300 – 47000 m³/hour

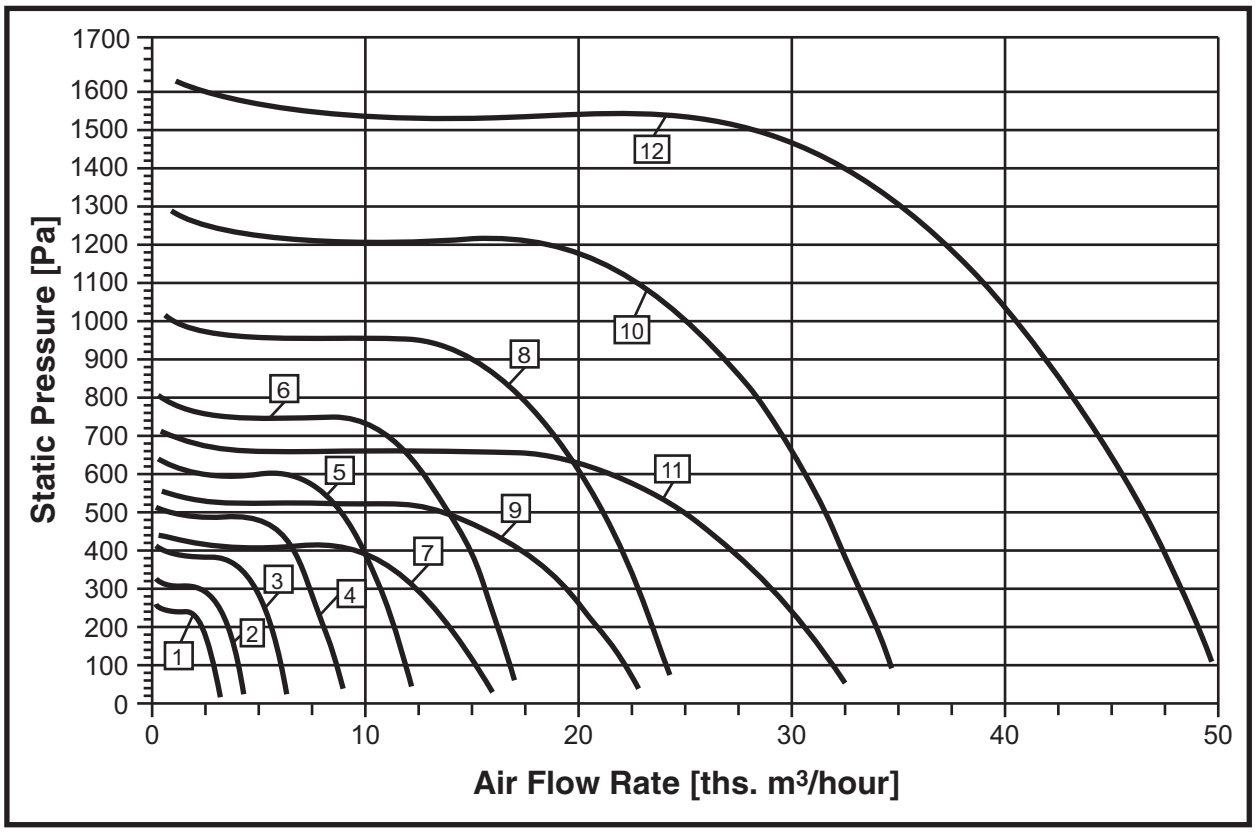

No.	Fan Type	Modification No.	Motor Type		Fan Weight without Motor, max [kg]
			Rotation Speed [rpm]	Power [kW]	
1	ВЕРС-Б-3,15	00	1450	0,25	46
2	ВЕРС-Б-3,55	00	1450	0,55	54
3	ВЕРС-Б-4	00	1450	0,75	73
4	ВЕРС-Б-4,5	00	1450	1,5	98
5	ВЕРС-Б-5	00	1450	2,2	135
6	ВЕРС-Б-5,6	00	1450	4,0	153
7	ВЕРС-Б-6,3	00	950	2,2	160
8		01	1450	7,5	187
9	ВЕРС-Б-7,1	00	950	4,0	210
10		01	1450	15	285
11	ВЕРС-Б-8	00	950	7,5	360
12		01	1450	22	390

CHARACTERISTICS SUMMARY DIAGRAM

300 – 47000 m³/hour

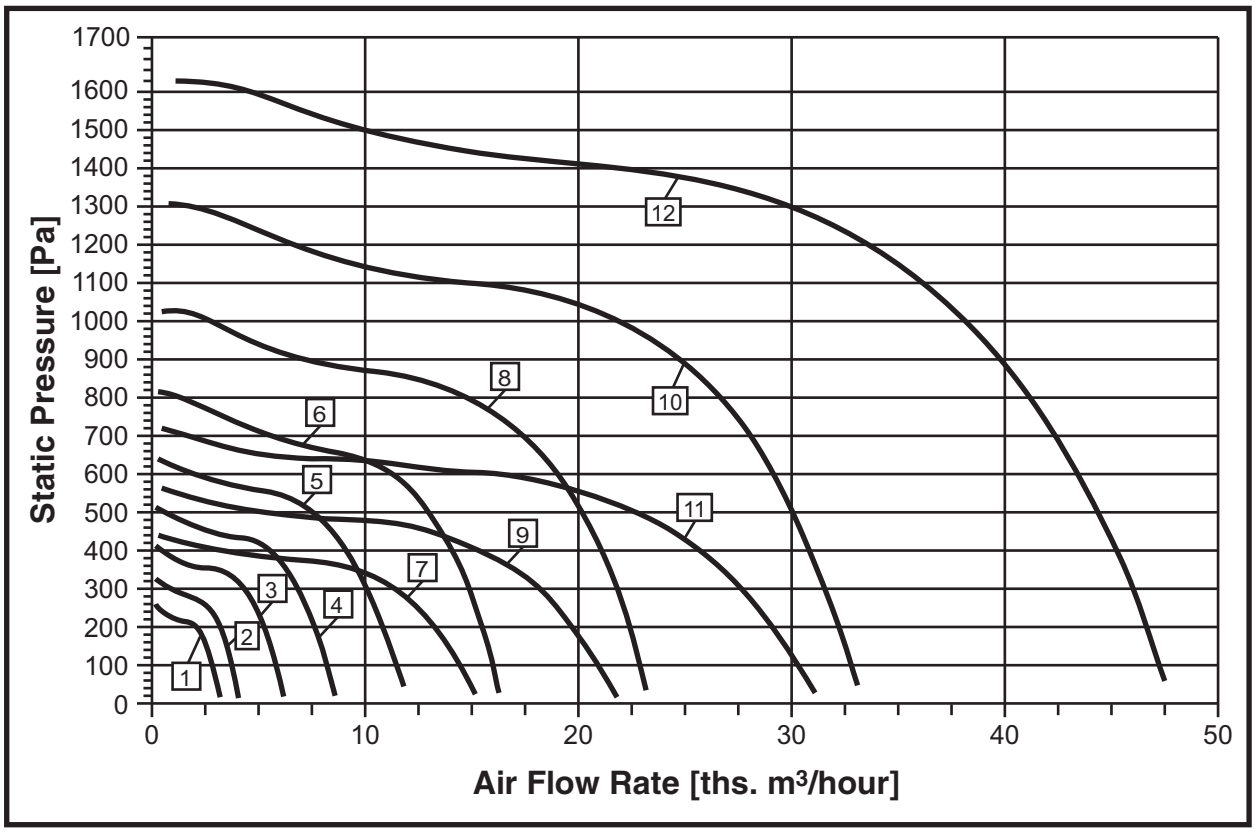

No.	Fan Type	Modification No.	Motor Type		Fan Weight without Motor, max [kg]
			Rotation Speed [rpm]	Power [kW]	
1	ВЕРС-Б(Ф)-3,15	00	1450	0,25	46
2	ВЕРС-Б(Ф)-3,55	00	1450	0,55	54
3	ВЕРС-Б(Ф)-4	00	1450	0,75	73
4	ВЕРС-Б(Ф)-4,5	00	1450	1,5	98
5	ВЕРС-Б(Ф)-5	00	1450	2,2	135
6	ВЕРС-Б(Ф)-5,6	00	1450	4,0	153
7	ВЕРС-Б(Ф)-6,3	00	950	2,2	160
8		01	1450	7,5	187
9	ВЕРС-Б(Ф)-7,1	00	950	4,0	210
10		01	1450	15	285
11	ВЕРС-Б(Ф)-8	00	950	7,5	360
12		01	1450	22	390

Manufactured in accordance with TU 4861-021-64600223-12

3000 – 126000 m³/hour

Application:

- for air pressurization in the fire protection systems;
- for fresh air supply in case of fire;
- for general ventilation systems (equipment may be installed with short ductwork).

Aerodynamic performance is defined in accordance with ISO 5801 (GOST 10921). Characteristics are specified for normal atmospheric conditions (20°C, 760Mmhg). Dynamic pressure corresponds to the cross-section of air pressurization fan outlet flange.

Air pressurization fans may operate without limitations for power in the whole range of capacity.

Air pressurization fans may be mounted in any position (horizontally, vertically, inclined).

Confuser on the intake of considered air pressurization fans is required for adjustment of passing flow and reduction of input resistance. It is recommended to be used in case, when fan is the first device in a circuit. In case of long input manifold installation of confuser on the fan intake is not required.

Diffuser on the output of air pressurization fans is required to partially use dynamic pressure and to reduce pressure losses in discharge manifold.

Explosion-proof version is available.

Fans are denoted as follows:

УВОП - К Д А - 5 В - 2 - УЗ

- УЗ — Climatic version;
- 2 — Number of motor poles (2, 4, 6);
- В — Enclosure type (explosion proof);
- 5 — Fan open flow cross-section diameter in decimeters (fan number);
- А — Impeller design (А, Б, В, Г, Д, Е, Ж);
- Д — Diffuser at the outlet;
- К — Confuser on the intake.
- УВОП — Fan Type (Air pressurization axial ventilation plant).

№	Fan Type	Dimensions [mm]																n	Weight [kg]
		D	D_1	D_2	D_3	D_4	D_5	d	B	B_1	B_2	L	L_1	L_2	L_3	H	h		
1	УВОП-КД-А-5-2	508	560	620	780	660	595	12	460	384	426	975	480	280	215	805	415	12	38
2	УВОП-КД-Б-5-2																		43
3	УВОП-КД-В-5-2																		46
4	УВОП-КД-Г-5-2																		49
5	УВОП-КД-Д-5-2																		56
6	УВОП-КД-А-6,3-2	638	690	770	950	810	730	12	570	480	522	1210	610	350	250	975	500	12	62
7	УВОП-КД-Б-6,3-2																		70
8	УВОП-КД-В-6,3-2																		70
9	УВОП-КД-Г-6,3-2																		91
10	УВОП-КД-Д-6,3-2																		97
11	УВОП-КД-А-8-4	816	860	960	1080	1000	910	14	770	680	630	1490	740	440	310	1095	555	16	121
12	УВОП-КД-Б-8-4																		129
13	УВОП-КД-В-8-4																		
14	УВОП-КД-Г-8-4																		136
15	УВОП-КД-Д-8-4																		
16	УВОП-КД-Е-8-4																		144
17	УВОП-КД-Ж-8-4																		
18	УВОП-КД-А-8-2																		138
19	УВОП-КД-Б-8-2																		200
20	УВОП-КД-В-8-2																		214
21	УВОП-КД-Г-8-2										670	1530	780						234
22	УВОП-КД-Д-8-2										630	1490	740						214
23	УВОП-КД-Е-8-2										670	1530	780						234
24	УВОП-КД-А-10-6	1016	1070	1190	1410	1225	1110	18	950	860	360	1355	480	550	325	1435	730	16	95
25	УВОП-КД-Б-10-6																		97
26	УВОП-КД-В-10-6										590	1585	710						140
27	УВОП-КД-Г-10-6																		
28	УВОП-КД-Д-10-6																		147
29	УВОП-КД-Е-10-6																		156
30	УВОП-КД-А-10-4																		127
31	УВОП-КД-Б-10-4																		143
32	УВОП-КД-В-10-4																		151
33	УВОП-КД-Г-10-4																		158
34	УВОП-КД-Д-10-4																		166
35	УВОП-КД-Е-10-4										730	1725	850						251
36	УВОП-КД-А-12,5-6	1266	1320	1470	1770	1500	1360	18	1100	1000	588	1750	720	650	380	1795	910	16	195
37	УВОП-КД-Б-12,5-6																		200
38	УВОП-КД-В-12,5-6										728	1890	860						282
39	УВОП-КД-Г-12,5-6																		312
40	УВОП-КД-А-12,5-4																		282
41	УВОП-КД-Б-12,5-4										858	2020	990						353
42	УВОП-КД-В-12,5-4																		383
43	УВОП-КД-Г-12,5-4										818	1980	950						488
44	УВОП-КД-Д-12,5-4																		462

Notes:
1) Weight specified in the table does not include weight of diffuser and confuser.
2) Weight is specified for reference only

Weights of Confuser and Diffuser for УВОП (UVOP) Fans

Weight [kg]									
Diffuser					Confuser				
УВОП-5	УВОП-6,3	УВОП-8	УВОП-10	УВОП-12,5	УВОП-5	УВОП-6,3	УВОП-8	УВОП-10	УВОП-12,5
10	15	23	30	48	10	15	22	27	46

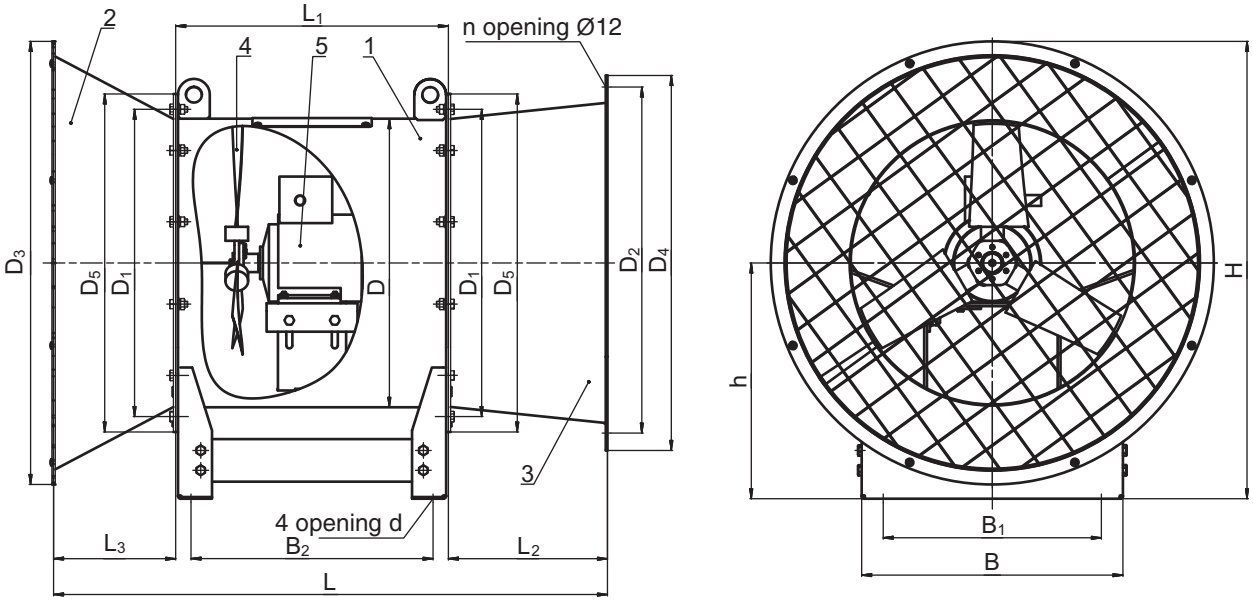

1 – fan; 2 – confuser; 3 – diffuser; 4 – impeller; 5 – electric motor.

OPERATION AREA SUMMARY DIAGRAM

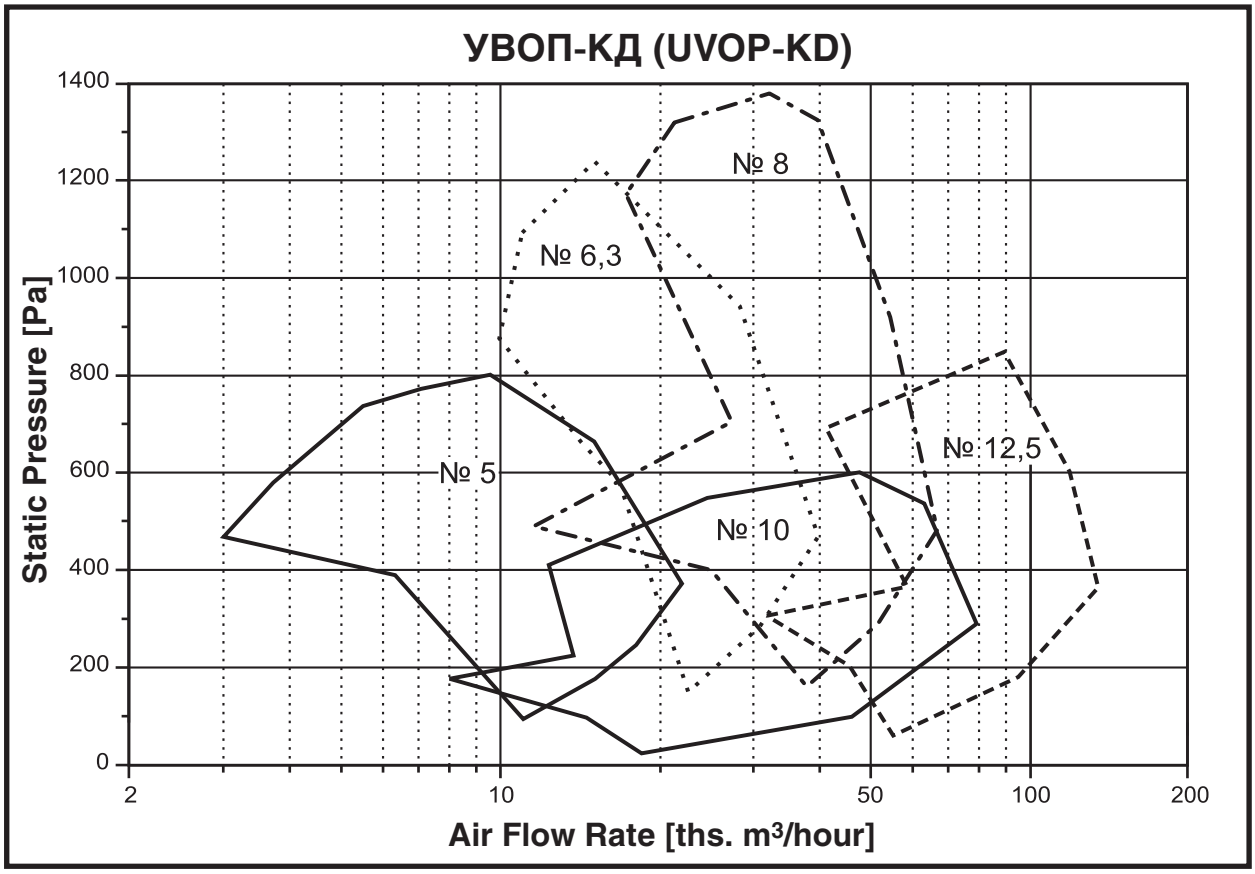

AIR PRESSURIZATION FANS AERODYNAMIC PERFORMANCE

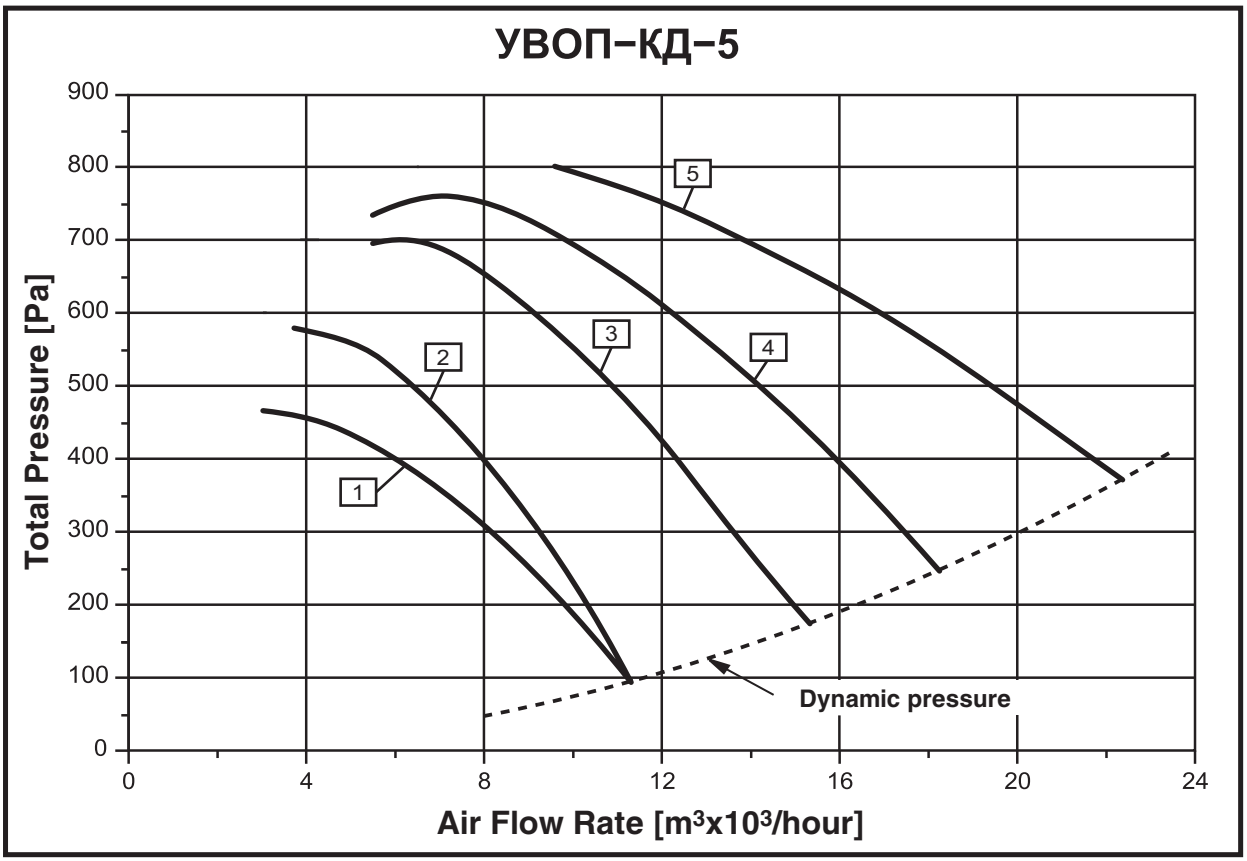

No.	Fan Type	Electric Motor			Operation Area Parameters		Adjusted Sound Power Level
		Type	Rotation Speed [min^{-1}]	Genera-ting Capacity [kW]	Efficiency [m³x10³/hour]	Total Pressure [Pa]	
1	УВОП-А-5-2	АИР71В2	2900	1,1	3,0 – 11,0	460 – 95	99
2	УВОП-Б-5-2	АИР80А2	2900	1,5	3,7 – 11,0	580 – 95	100
3	УВОП-В-5-2	АИР80В2	2900	2,2	5,5 – 15,0	700 – 175	98
4	УВОП-Г-5-2*	АИР90L2	2900	3,0	5,5 – 18,0	770 – 245	98
5	УВОП-Д-5-2*	АИР100S2	2900	4,0	9,6 – 22,0	800 – 370	97

Notes:
* Explosion-proof version is not available.

AIR PRESSURIZATION FANS AERODYNAMIC PERFORMANCE

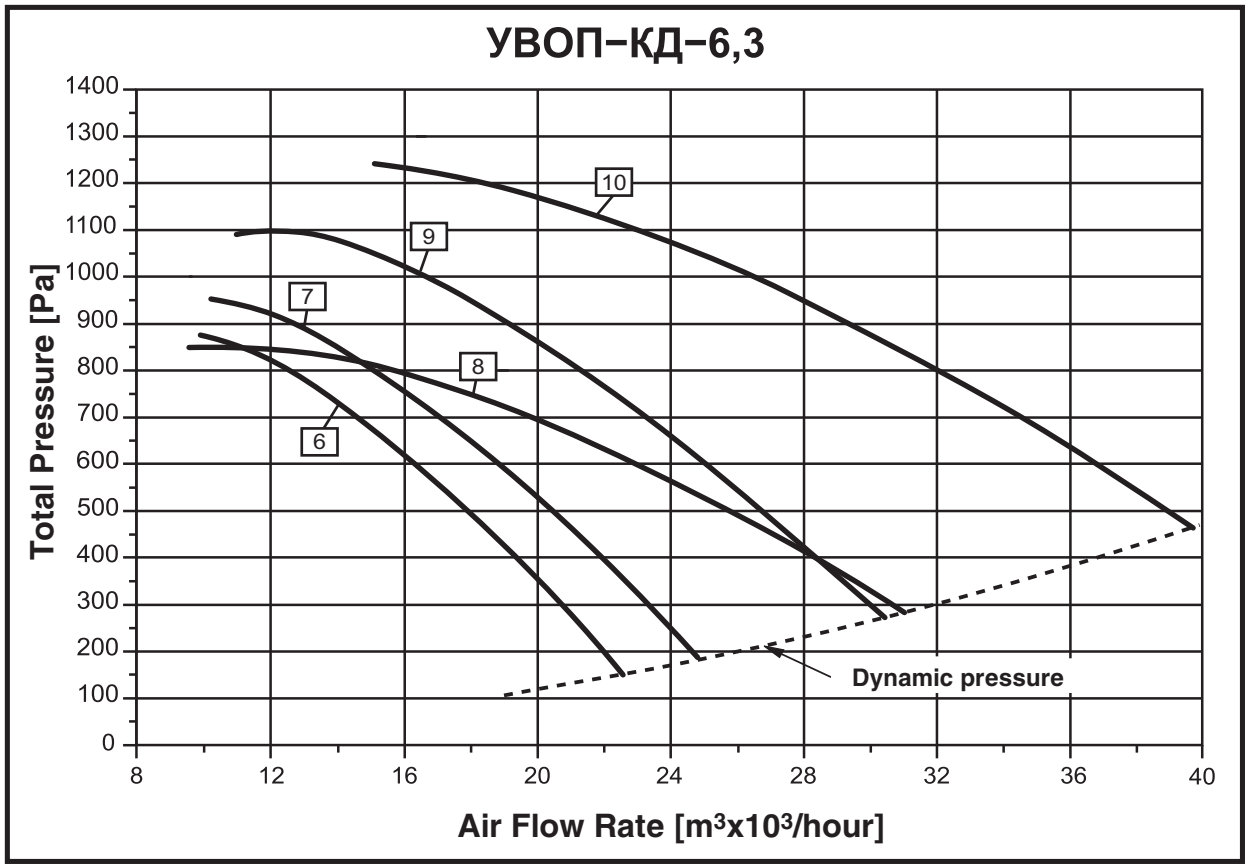

No.	Fan Type	Electric Motor			Operation Area Parameters		Adjusted Sound Power Level
		Type	Rotation Speed [min^{-1}]	Genera-ting Capacity [kW]	Efficiency [m^{3}x10^3/hour]	Total Pressure [Pa]	
6	УВОП-А-6,3-2	АИР100S2	2900	4	9,9 – 22,0	875 – 150	108
7	УВОП-Б-6,3-2	АИР100L2	2900	5,5	10,2 – 25,0	950 – 180	107
8	УВОП-В-6,3-2	АИР100L2	2900	5,5	9,6 – 31,0	850 – 280	102
9	УВОП-Г-6,3-2*	АИР112М2	2900	7,5	11,0 – 30,0	1100 – 270	106
10	УВОП-Д-6,3-2*	АИР132М2	2900	11,0	15,0 – 39,0	1240 – 460	105

Notes:
* Explosion-proof version is not available.

AIR PRESSURIZATION FANS AERODYNAMIC PERFORMANCE

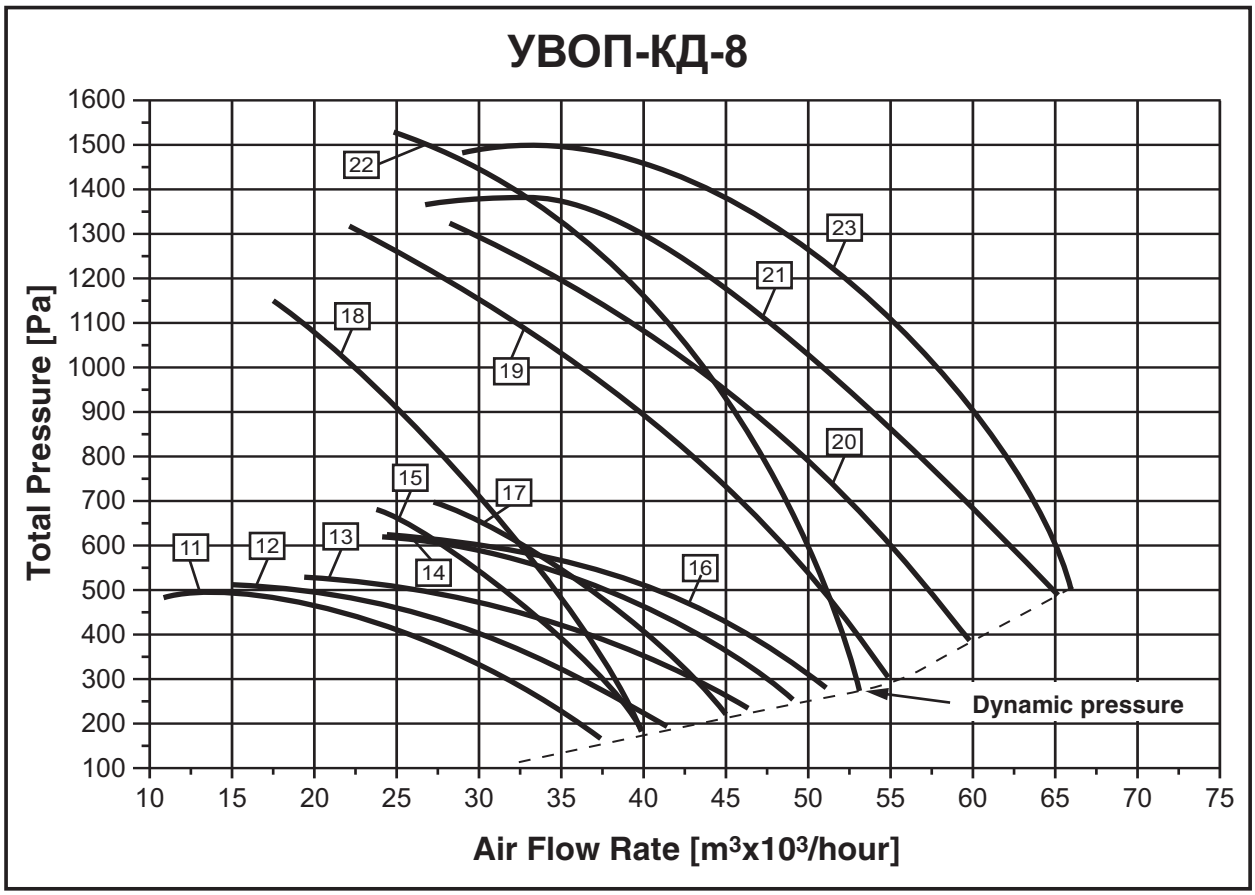

No.	Fan Type	Electric Motor			Operation Area Parameters		Adjusted Sound Power Level
		Type	Rotation Speed [min-1]	Genera-ting Capacity [kW]	Efficiency [m³x10³/hour]	Total Pressure [Pa]	
11	УВОП-А-8-4	АИР100L4	1450	4,0	11,5 – 37,0	510 – 155	94
12	УВОП-Б-8-4	АИР112M4	1450	5,5	15,2 – 41,0	520 – 190	93
13	УВОП-В-8-4	АИР112M4	1450	5,5	19,2 – 46,0	530 – 250	92
14	УВОП-Г-8-4	АИР132S4	1450	7,5	24,0 – 49,0	615 – 270	93
15	УВОП-Д-8-4	АИР132S4	1450	7,5	23,5 – 40,0	680 – 180	95
16	УВОП-Е-8-4	АИР132M4	1450	11,0	28,8 – 51,0	610 – 290	94
17	УВОП-Ж-8-4	АИР132M4	1450	11,0	27,3 – 45,0	700 – 230	95
18	УВОП-А-8-2	АИР132M2	2900	11,0	17,5 – 42,0	1150 – 180	102
19	УВОП-Б-8-2*	АИР160S2	2900	15,0	22,0 – 55,0	1310 – 300	104
20	УВОП-В-8-2*	АИР160M2	2900	18,5	28,0 – 60,0	1330 – 400	106
21	УВОП-Г-8-2*	АИР180S2	2900	22,0	27,0 – 62,0	1360 – 490	107
22	УВОП-Д-8-2*	АИР160M2	2900	18,5	22,0 – 53,2	1530 – 286	108
23	УВОП-Е-8-2*	АИР180S2	2900	22	28,0 – 65,8	1480 – 515	109

Notes:
* Explosion-proof version is not available.

AIR PRESSURIZATION FANS AERODYNAMIC PERFORMANCE

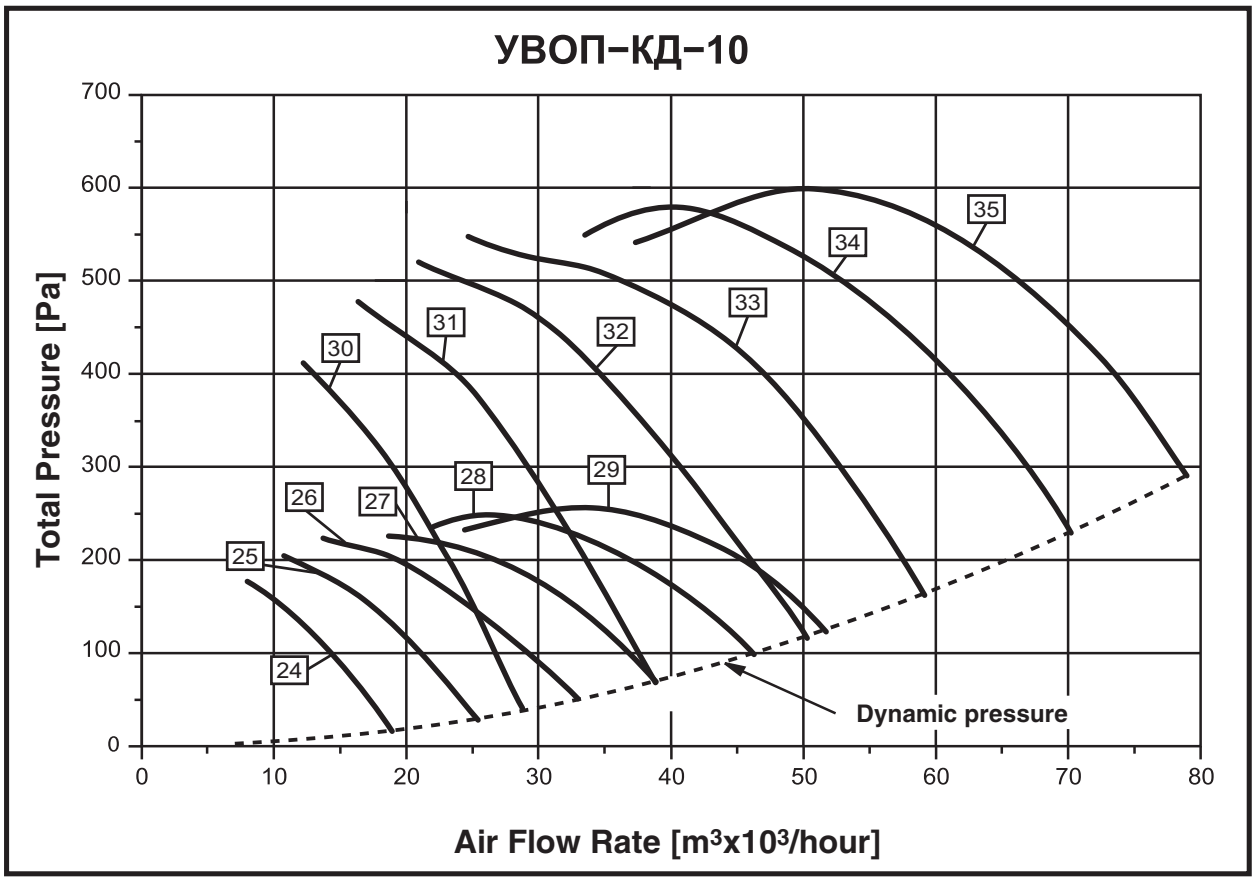

No.	Fan Type	Electric Motor			Operation Area Parameters		Adjusted Sound Power Level
		Type	Rotation Speed [min^{-1}]	Genera-ting Capacity [kW]	Efficiency [m^{3}x10^3/hour]	Total Pressure [Pa]	
24	УВОП-А-10-6	АИР80А6	950	0,75	8,0 – 18,0	170 – 20	82
25	УВОП-Б-10-6	АИР80В6	950	1,1	12,0 – 25,0	190 – 30	84
26	УВОП-В-10-6	АИР100L6	950	2,2	14,0 – 33,0	220 – 50	87
27	УВОП-Г-10-6	АИР100L6	950	2,2	18,0 – 38,0	220 – 70	89
28	УВОП-Д-10-6	АИР112А6	950	3,0	21,0 – 46,0	250 – 100	91
29	УВОП-Е-10-6	АИР112В6	950	4,0	24,0 – 51,0	260 – 125	92
30	УВОП-А-10-4	АИР100S4	1450	3,0	12,0 – 28,0	400 – 38	91
31	УВОП-Б-10-4	АИР100L4	1450	4,0	16,0 – 38,0	450 – 70	94
32	УВОП-В-10-4	АИР112М4	1450	5,5	24,0 – 50,0	500 – 120	96
33	УВОП-Г-10-4	АИР132S4	1450	7,5	28,0 – 59,0	520 – 170	98
34	УВОП-Д-10-4	АИР132М4	1450	11,0	33,0 – 70,0	580 – 230	100
35	УВОП-Е-10-4	АИР160S4	1450	15,0	37,0 – 79,0	600 – 290	101

AIR PRESSURIZATION FANS AERODYNAMIC PERFORMANCE

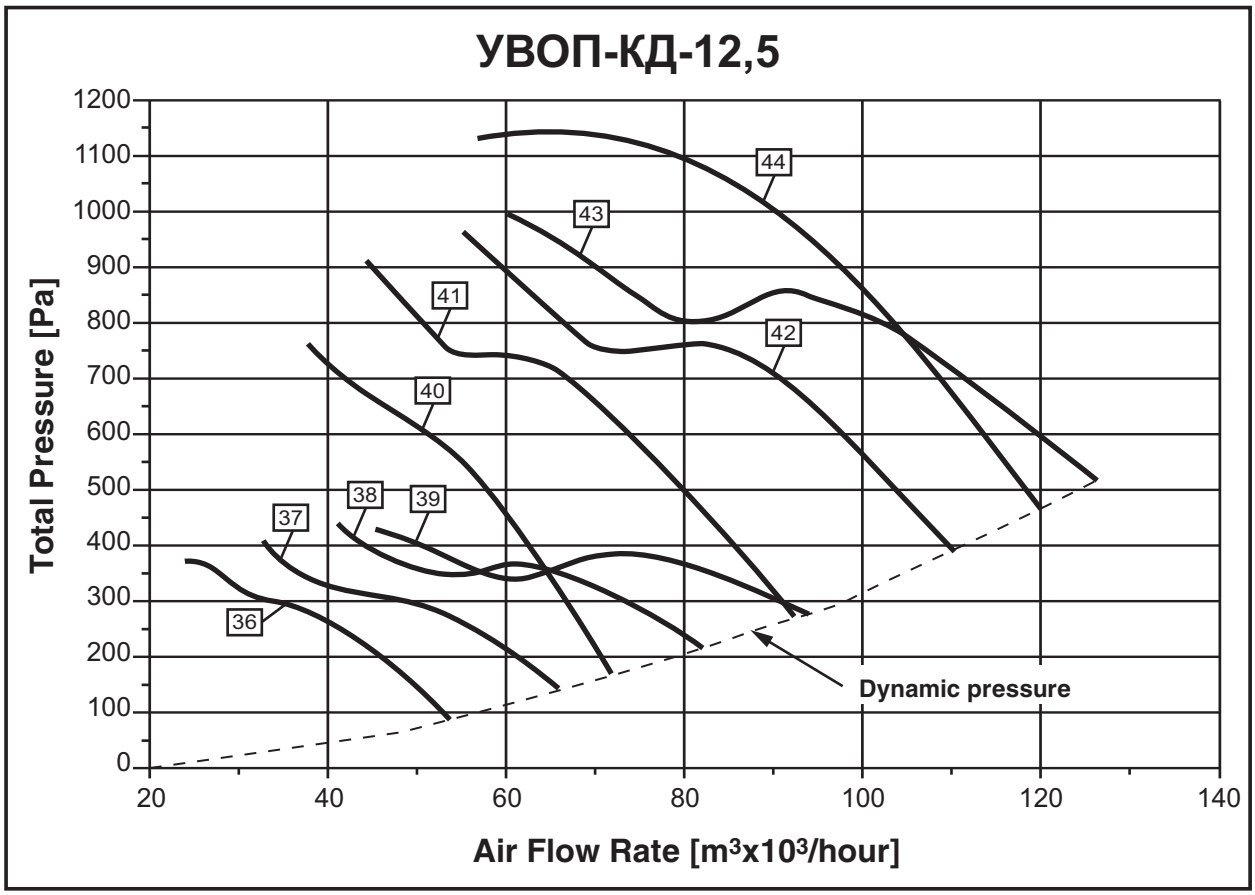

No.	Fan Type	Electric Motor			Operation Area Parameters		Adjusted Sound Power Level
		Type	Rotation Speed [min-1]	Genera-ting Capacity [kW]	Efficiency [m3x103/hour]	Total Pressure [Pa]	
36	УВОП-А-12,5-6	АИР132S6	950	5,5	24,0 – 53,7	350 – 90	94
37	УВОП-Б-12,5-6	АИР132M6	950	7,5	33,0 – 66,3	400 – 140	96
38	УВОП-В-12,5-6	АИР160S6	950	11,0	41,0 – 82,8	440 – 220	98
39	УВОП-Г-12,5-6	АИР160M6	950	15,0	45,0 – 93,7	430 – 280	100
40	УВОП-А-12,5-4	АИР160S4	1450	15,0	38,0 – 71,6	760 – 165	101
41	УВОП-Б-12,5-4	АИР180S4	1450	22,0	46,0 – 92,3	900 – 270	105
42	УВОП-В-12,5-4	АИР180M4	1450	30,0	55,0 – 110,0	935 – 390	106
43	УВОП-Г-12,5-4	АИР200L4	1450	45,0	60,0 – 126,0	990 – 510	108
44	УВОП-Д-12,5-4	АИР200M4	1450	37,0	57,0 – 120,0	1130 – 460	110

Manufactured in accordance with TU 4861-022-64600223-11

Application:

- for air pressurization in the fire protection systems and for fresh air supply in case of fire;
- for general ventilation systems (equipment may be installed with short ductwork).

Aerodynamic performance is defined in accordance with ISO 5801 (GOST 10921). Characteristics are specified for normal atmospheric conditions (20°C, 760Mmhg, 1010GPa). Dynamic pressure corresponds to the cross-section of air pressurization fan outlet flange.

Air pressurization fans may operate without limitations for power in the whole range of capacity.

Explosion-proof version is available.

Fans are denoted as follows:

КВОП - К - А - 5 В - 2 - У1
- У1 – Climatic version;
- 2 – Number of motor poles (2, 4, and 6);
- В – Enclosure type (explosion proof);
- 5 – Fan open flow cross-section diameter in decimeters (fan number);
- А – Impeller design (А, Б, В, Г, Д, Е, Ж);
- К – Confusor on the intake;
- КВОП – Fan Type (Air pressurization roof axial fan)

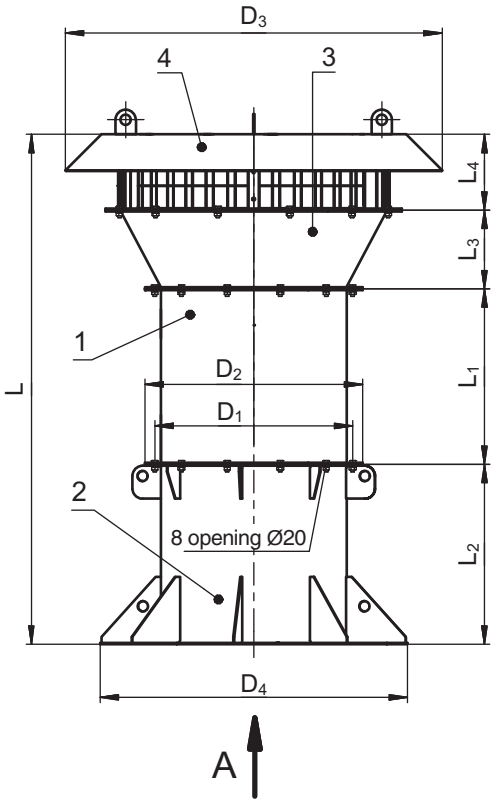

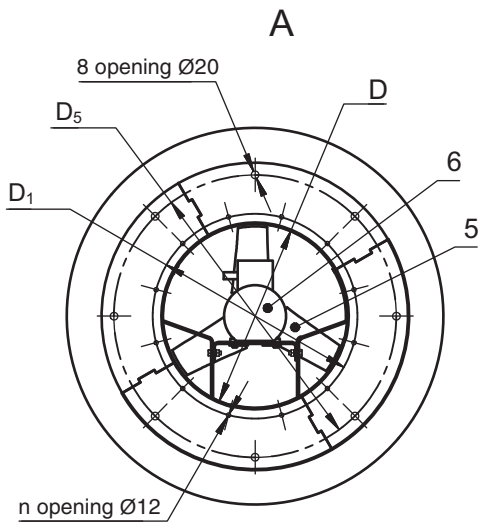

1 – Fan;
2 – Mounting sleeve (СК-К (SK-K) - without check-valve, СК-КО (SK-KO) - with check-valve);
3 – Confusor;
4 – Roof;
5 – Impeller;
6 – Engine.

Notes:
1) Mounting sleeve and check-valve has to be pointed as options with order.
2) Selection of mounting sleeve – see p. 162.

No.	Fan Type	Dimensions [mm]											n	Weight [kg]
		D	D_1	D_2	D_3	D_4	D_5	L	L_1	L_2	L_3	L_4		
1	КВОП-К-А-5-2	504	560	595	1090	840	772	1394	480	492	215	207	12	68
2	КВОП-К-Б-5-2													73
3	КВОП-К-В-5-2													76
4	КВОП-К-Г-5-2													79
5	КВОП-К-Д-5-2													86
6	КВОП-К-А-6,3-2	634	690	730	1300	1140	1072	1727	610	620	250	247	12	103
7	КВОП-К-Б-6,3-2													111
8	КВОП-К-В-6,3-2													111
9	КВОП-К-Г-6,3-2													132
10	КВОП-К-Д-6,3-2													138
11	КВОП-К-А-8-4	810	860	900	1480	1140	1072	2135	740	800	310	285	16	167
12	КВОП-К-Б-8-4													175
13	КВОП-К-В-8-4													175
14	КВОП-К-Г-8-4													182
15	КВОП-К-Д-8-4													182
16	КВОП-К-Е-8-4													190
17	КВОП-К-Ж-8-4													190
18	КВОП-К-А-8-2													184
19	КВОП-К-Б-8-2													246
20	КВОП-К-В-8-2													260
21	КВОП-К-Г-8-2							2175	780					280
22	КВОП-К-Д-8-2							2135	740					260
23	КВОП-К-Е-8-2							2175	780					280
24	КВОП-К-А-10-6	1010	1070	1110	1960	1340	1272	2175	480	1000	325	370	16	177
25	КВОП-К-Б-10-6													179
26	КВОП-К-В-10-6							2405	710					221
27	КВОП-К-Г-10-6													221
28	КВОП-К-Д-10-6													228
29	КВОП-К-Е-10-6													237
30	КВОП-К-А-10-4													208
31	КВОП-К-Б-10-4													224
32	КВОП-К-В-10-4													232
33	КВОП-К-Г-10-4													239
34	КВОП-К-Д-10-4													247
35	КВОП-К-Е-10-4							2545	850					332
36	КВОП-К-А-12,5-6	1260	1320	1360	2500	1590	1522	2920	720	1200	380	620	16	376
37	КВОП-К-Б-12,5-6													381
38	КВОП-К-В-12,5-6							3060	860					460
39	КВОП-К-Г-12,5-6													490
40	КВОП-К-А-12,5-4													460
41	КВОП-К-Б-12,5-4							3190	990					530
42	КВОП-К-В-12,5-4													560
43	КВОП-К-Г-12,5-4							3150	950					670
44	КВОП-К-Д-12,5-4													640

Notes:
1) Weight is specified for reference only.

AIR PRESSURIZATION FANS AERODYNAMIC PERFORMANCE

3000 – 22000 m³/hour

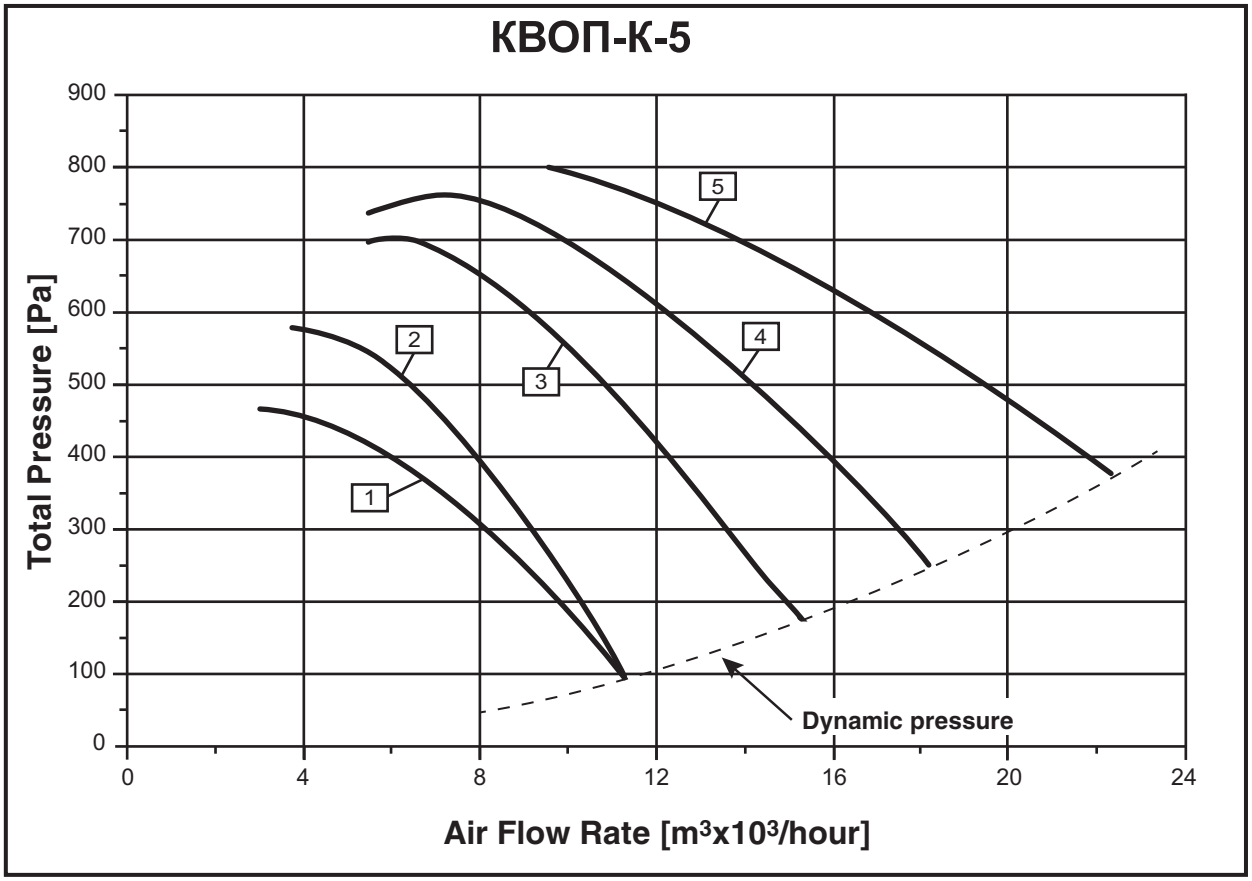

No. п/п	Fan Type	Electric Motor			Operation Area Parameters		Adjusted Sound Power Level L_{WA}, [dBA]
		Type	Rotation Speed [min⁻¹]	Generating Capacity [kW]	Efficiency [m³x10³/ hour]	Total Pressure [Pa]	
1	КВОП-К-А-5-2	АИР71В2	2900	1,1	3,0 – 11,0	460 – 95	99
2	КВОП-К-Б-5-2	АИР80А2	2900	1,5	3,7 – 11,0	580 – 95	100
3	КВОП-К-В-5-2	АИР80В2	2900	2,2	5,5 – 15,0	700 – 175	98
4	КВОП-К-Г-5-2*	АИР90L2	2900	3,0	5,5 – 18,0	770 – 245	98
5	КВОП-К-Д-5-2*	АИР100S2	2900	4,0	9,6 – 22,0	800 – 370	97

Notes:
* Explosion-proof version is not available.

AIR PRESSURIZATION FANS AERODYNAMIC PERFORMANCE

9600 – 39000 m³/hour

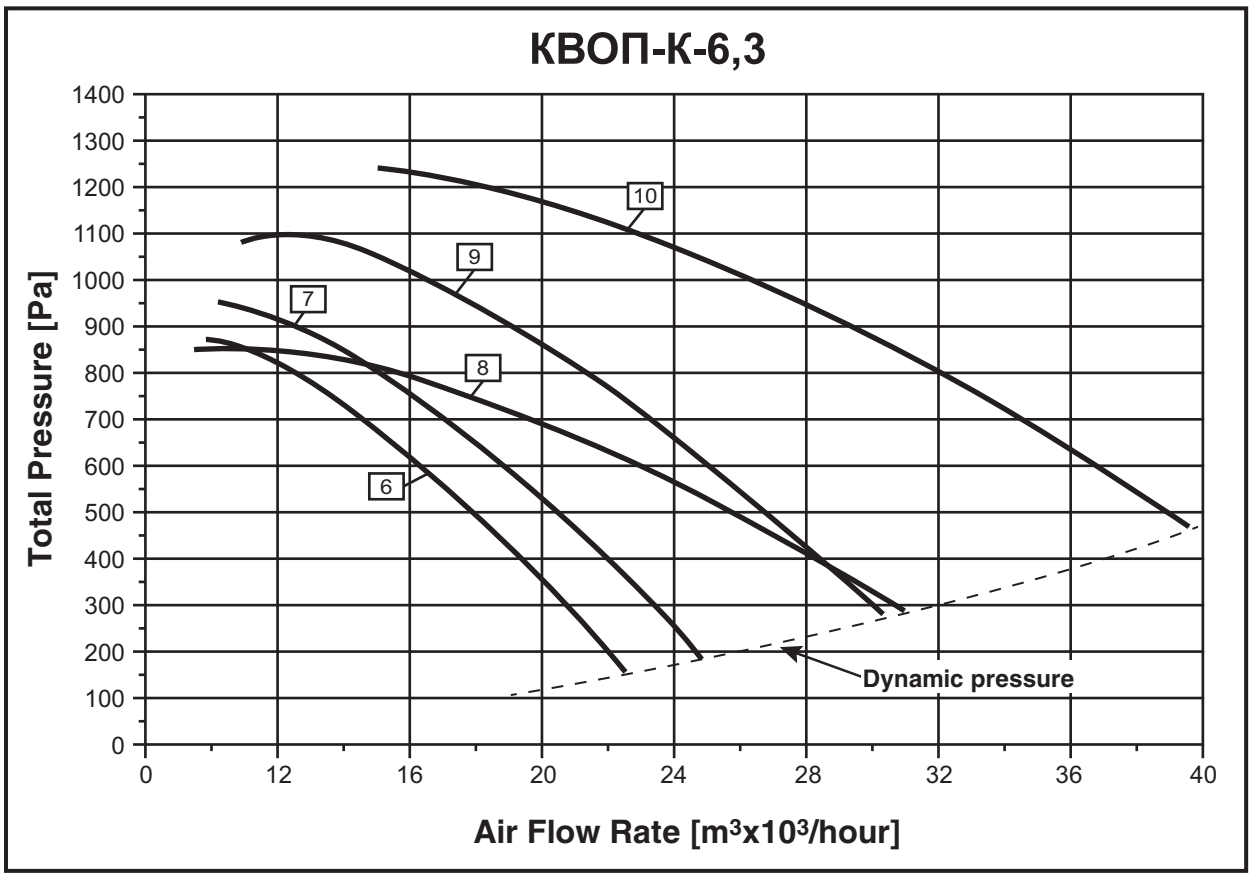

No.	Fan Type	Electric Motor			Operation Area Parameters		Adjusted Sound Power Level L_{WA}, [dBA]
		Type	Rotation Speed [min⁻¹]	Generating Capacity [kW]	Efficiency [m³x10³/ hour]	Total Pressure [Pa]	
6	КВОП-К-А-6,3-2	АИР100S2	2900	4	9,9 – 22,0	875 – 150	108
7	КВОП-К-Б-6,3-2	АИР100L2	2900	5,5	10,2 – 25,0	950 – 180	107
8	КВОП-К-В-6,3-2	АИР100L2	2900	5,5	9,6 – 31,0	850 – 280	102
9	КВОП-К-Г-6,3-2*	АИР112М2	2900	7,5	11,0 – 30,0	1100 – 270	106
10	КВОП-К-Д-6,3-2*	АИР132М2	2900	11,0	15,0 – 39,0	1240 – 460	105

Notes:
* Explosion-proof version is not available.

AIR PRESSURIZATION FANS AERODYNAMIC PERFORMANCE

11500 – 65800 m³/hour

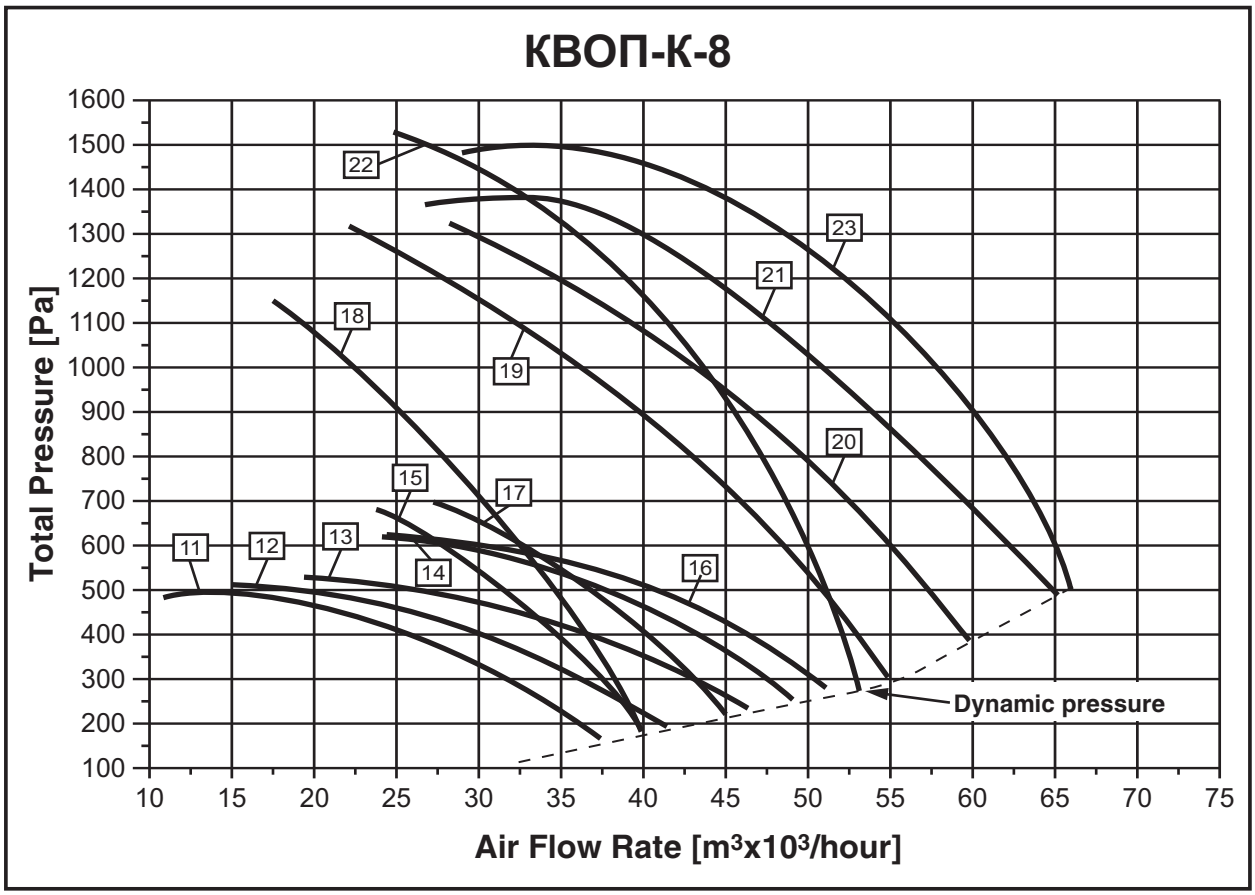

No.	Fan Type	Electric Motor			Operation Area Parameters		Adjusted Sound Power Level L_{WA}, [dBA]
		Type	Rotation Speed [min⁻¹]	Generating Capacity [kW]	Efficiency [m³x10³/hour]	Total Pressure [Pa]	
11	КВОП-К-А-8-4	АИР100L4	1450	4,0	11,5 – 37,0	510 – 155	94
12	КВОП-К-Б-8-4	АИР112M4	1450	5,5	15,2 – 41,0	520 – 190	93
13	КВОП-К-В-8-4	АИР112M4	1450	5,5	19,2 – 46,0	530 – 250	92
14	КВОП-К-Г-8-4	АИР132S4	1450	7,5	24,0 – 49,0	615 – 270	93
15	КВОП-К-Д-8-4	АИР132S4	1450	7,5	23,5 – 40,0	680 – 180	95
16	КВОП-К-Е-8-4	АИР132M4	1450	11,0	28,8 – 51,0	610 – 290	94
17	КВОП-К-Ж-8-4	АИР132M4	1450	11,0	27,3 – 45,0	700 – 230	95
18	КВОП-К-А-8-2	АИР132M2	2900	11,0	17,5 – 42,0	1150 – 180	102
19	КВОП-К-Б-8-2*	АИР160S2	2900	15,0	22,0 – 55,0	1310 – 300	104
20	КВОП-К-В-8-2*	АИР160M2	2900	18,5	28,0 – 60,0	1330 – 400	106
21	КВОП-К-Г-8-2*	АИР180S2	2900	22,0	27,0 – 62,0	1360 – 490	107
22	КВОП-К-Д-8-2*	АИР160M2	2900	18,5	22,0 – 53,2	1530 – 286	108
23	КВОП-К-Е-8-2*	АИР180S2	2900	22	28,0 – 65,8	1480 – 515	109

Notes:
* Explosion-proof version is not available.

AIR PRESSURIZATION FANS AERODYNAMIC PERFORMANCE

8000 – 79000 m³/hour

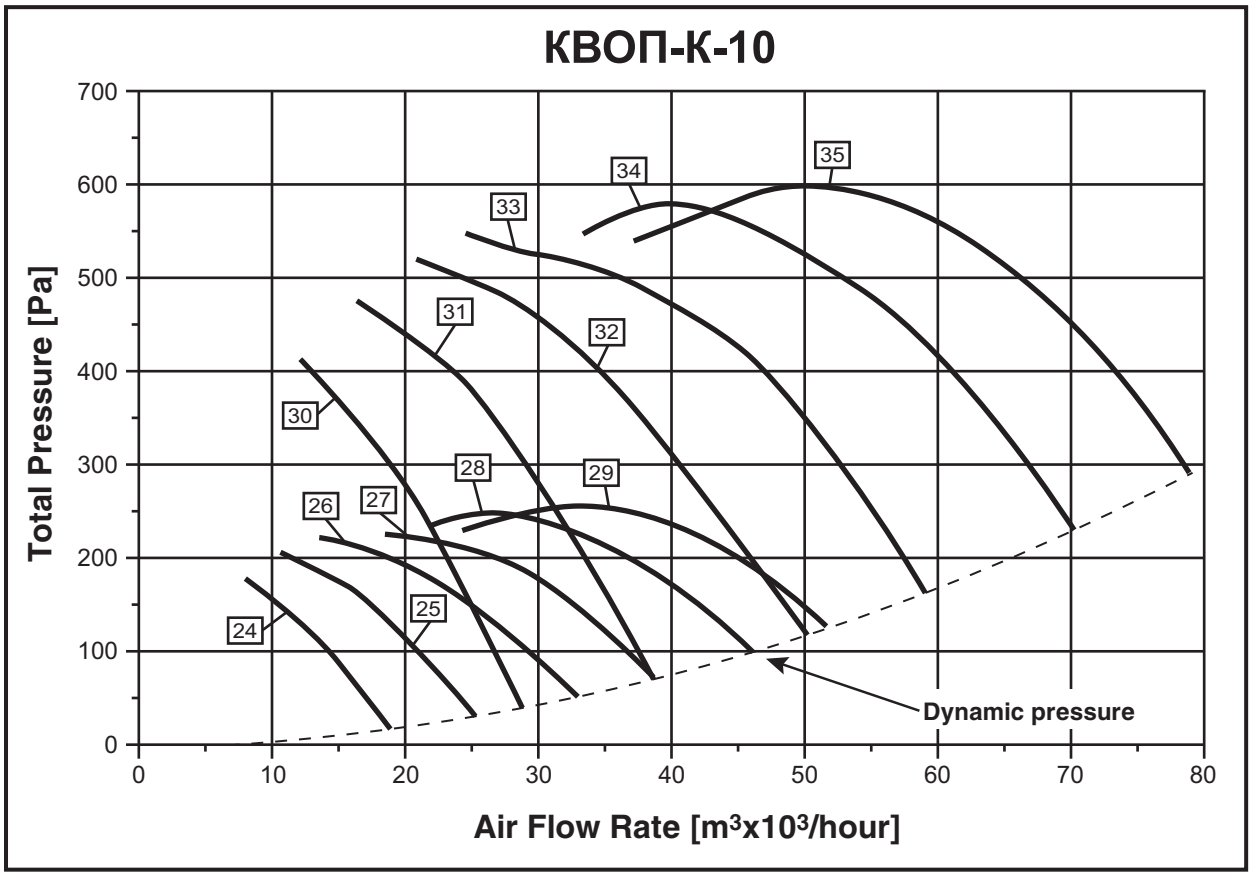

No.	Fan Type	Electric Motor			Operation Area Parameters		Adjusted Sound Power Level L_{WA}, [dBA]
		Type	Rotation Speed [min⁻¹]	Generating Capacity [kW]	Efficiency [m³x10³/ hour]	Total Pressure [Pa]	
24	КВОП-К-А-10-6	АИР80А6	950	0,75	8,0 – 18,0	170 – 20	82
25	КВОП-К-Б-10-6	АИР80В6	950	1,1	12,0 – 25,0	190 – 30	84
26	КВОП-К-В-10-6	АИР100L6	950	2,2	14,0 – 33,0	220 – 50	87
27	КВОП-К-Г-10-6	АИР100L6	950	2,2	18,0 – 38,0	220 – 70	89
28	КВОП-К-Д-10-6	АИР112А6	950	3,0	21,0 – 46,0	250 – 100	91
29	КВОП-К-Е-10-6	АИР112В6	950	4,0	24,0 – 51,0	260 – 125	92
30	КВОП-К-А-10-4	АИР100S4	1450	3,0	12,0 – 28,0	400 – 38	91
31	КВОП-К-Б-10-4	АИР100L4	1450	4,0	16,0 – 38,0	450 – 70	94
32	КВОП-К-В-10-4	АИР112М4	1450	5,5	24,0 – 50,0	500 – 120	96
33	КВОП-К-Г-10-4	АИР132S4	1450	7,5	28,0 – 59,0	520 – 170	98
34	КВОП-К-Д-10-4	АИР132М4	1450	11,0	33,0 – 70,0	580 – 230	100
35	КВОП-К-Е-10-4	АИР160S4	1450	15,0	37,0 – 79,0	600 – 290	101

AIR PRESSURIZATION FANS AERODYNAMIC PERFORMANCE

24000 – 126000 m³/hour

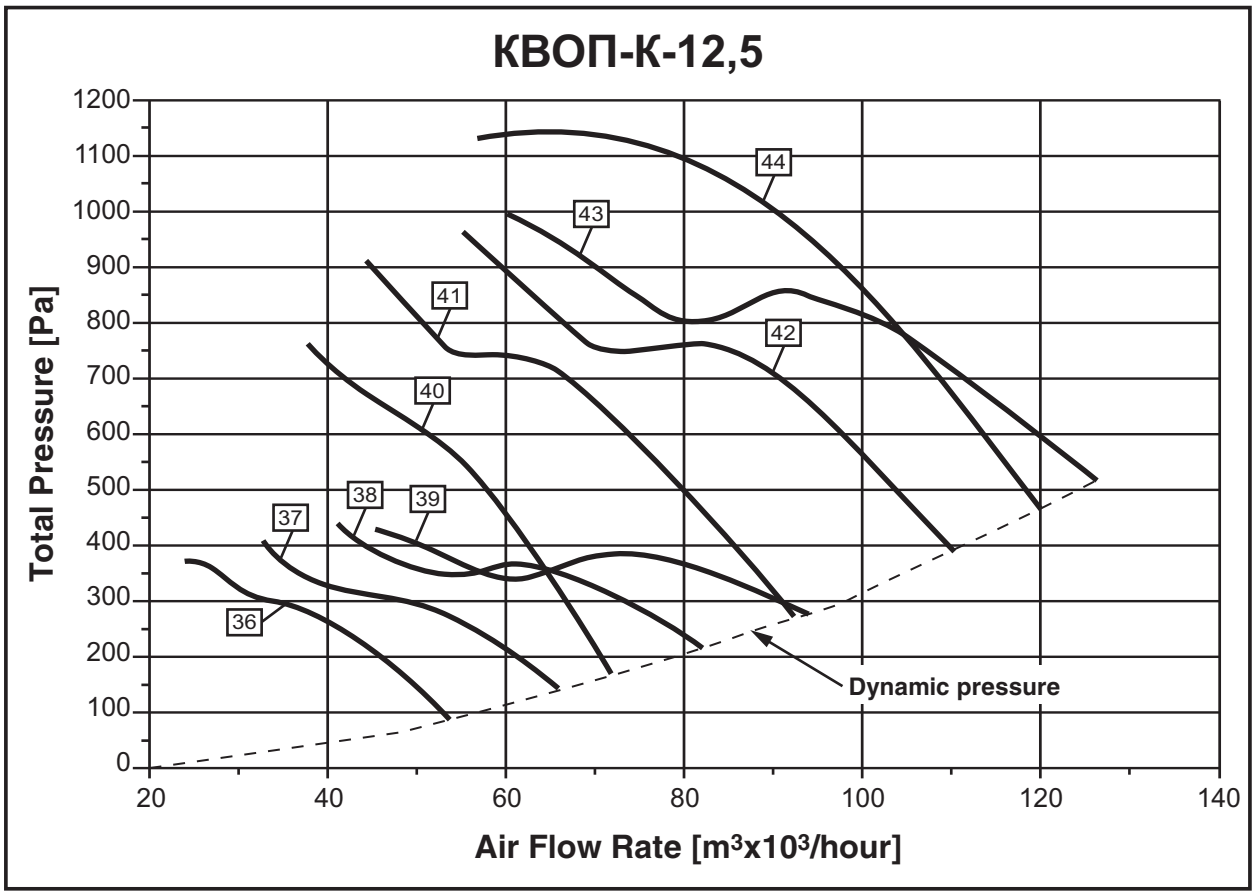

No.	Fan Type	Electric Motor			Operation Area Parameters		Adjusted Sound Power Level L_{WA}, [dBA]
		Type	Rotation Speed [min⁻¹]	Generating Capacity [kW]	Efficiency [m³x10³/hour]	Total Pressure [Pa]	
36	КВОП-К-А-12,5-6	АИР132S6	950	5,5	24,0 – 53,7	350 – 90	94
37	КВОП-К-Б-12,5-6	АИР132M6	950	7,5	33,0 – 66,3	400 – 140	96
38	КВОП-К-В-12,5-6	АИР160S6	950	11,0	41,0 – 82,8	440 – 220	98
39	КВОП-К-Г-12,5-6	АИР160M6	950	15,0	45,0 – 93,7	430 – 280	100
40	КВОП-К-А-12,5-4	АИР160S4	1450	15,0	38,0 – 71,6	760 – 165	101
41	КВОП-К-Б-12,5-4	АИР180S4	1450	22,0	46,0 – 92,3	900 – 270	105
42	КВОП-К-В-12,5-4	АИР180M4	1450	30,0	55,0 – 110,0	935 – 390	106
43	КВОП-К-Г-12,5-4	АИР200L4	1450	45,0	60,0 – 126,0	990 – 510	108
44	КВОП-К-Д-12,5-4	АИР200M4	1450	37,0	57,0 – 120,0	1130 – 460	110

CVM Manufacturing Works produces the following explosion-proof products under special customer's order:

Explosion-proof feature is denoted by the character "B" ("V") after the number as follows:

Fans are denoted as follows:

ВКРН - АФ - 3,15 **В** ДУ 400 - 01 - У1

- Climatic version;
- Number of motor poles (2,4,6,8,10,12,16);
- Maximum temperature of handled medium;
- Application code (smoke exhaustion);
- Enclosure type (explosion proof);
- Impeller diameter in decimeters;
- Enclosure (П; Д) or air emission direction option (Ф) – vertical air emission;
- Aerodynamic power index (А, Б, or В);
- Impeller blades type
  Н – backward-curved blades
  В – forward-curved blades;
- Fan Type (Roof radial fan).

Handled medium shall correspond to explosive gas and air-vapor mixtures of IIA and IIB categories, group T1 – T4 according to GOST R 51330.11-99 classification, which are not containing explosive dusts and explosive agents, with aggressiveness in relation to regular quality carbon steel not exceeding air aggressiveness. Medium shall not contain adhesive agents, fibrous materials, and abrasive materials, with dust and other solid impurities content of 100 mg/m^3 max.

Fans shall not be used for handling of gas and air-vapor mixtures from manufacturing plants, where explosive materials may be heated above self-ignition temperature or placed under excess pressure.

Fans are used for servicing the explosion hazard zones, class В-1а or class В-1б according to the Electric Installation Code classification.

Fans ВКРН-В ДУ (VKRN-V DU), ВКРВ-В ДУ (VKRV-V DU) and ВРП-В ДУ (VRP-V DU) are used in exhaust ventilation emergency systems of industrial, public, administrative, residential and other facilities according to Fire Code 105 of the State Fire-Fighting Service of the Ministry of Emergency Situations.

Explosion safety of the explosion proof fans are reached by the following means:

◆ Using constructional materials according to GOST R 55026-2012, which are safe with regard to gas-air mixture ignition because of frictional sparkling;

◆ Installation of special ring made of sparkles material in area of impeller rotation according to the requirements of GOST R 55026-2012;

◆ Implementation of explosion-proof accessory electric equipment.

Aerodynamic performance and noise characteristics of explosion proof fans correspond to characteristics of similar fan models without explosion proof enclosure.

All explosion-proof fans are by the GOSTR Certification System and have permission by the Federal Service for Environmental, Technological and Nuclear Supervision.

ACCESSORY EQUIPMENT FANS INSTALLATION

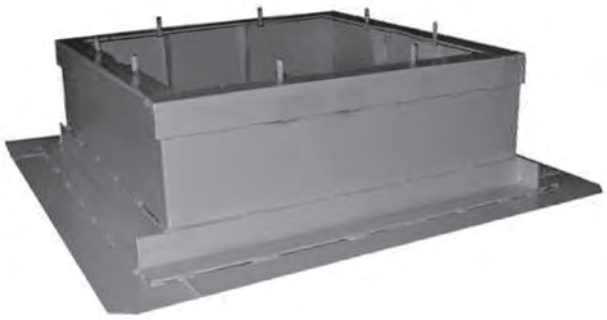

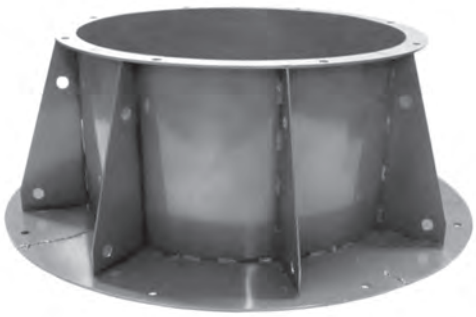

Fan Curbs.
Sound-Suppression Fan Curbs

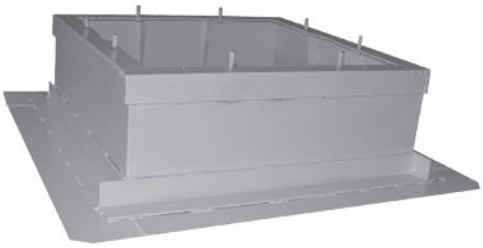

CVM Manufacturing Works has developed the line of roof fan curbs for installation of roof fans of its own making.

Roof fan curbs CK (SK, square roof fan curb), CKK (SKK, round room fan curb), CKУ (SKU, heat-insulated roof fan curb), and СКШ (SKSh, sound suppressing square roof fan curb) have been developed with consideration for connecting dimensions of roof fan curbs series C (S) and СБ (SB) developed by the State Industrial Complex and R&D Establishment “SantekhNIIproekt” recommended and previously implemented in the “Promventilyatsiya” system.

CK (SK) roof fan curbs are designed as rigid welded assembly in the form of a hollow square (in plan view). Fan is supported by upper flange made of hot-rolled angle sections with welded outward M12 pins. Roof fan curbs are based on a plate of wider area for mounting on load-bearing elements of a roof.

СКШ (SKSh) roof fan curbs differ from CK (SK) by sound absorbing material applied to the side walls and pressing mesh (sound trap). Besides, СКШ 700 (SKSh 700) and СКШ 1000 (SKSh 1000) are fitted with cartridges with sound absorbing material (splitter silencer). All roof fan curbs have protective decorative coating.

Sound-suppression ability of СКШ (SKSh) curbs L [dB] are presented in the table below:

Octave Bandwidth [Hz]

Roof Fan Curb Type	31	63	125	250	500	1000	2000	4000	8000
СКШ 400	1	3	6	11	17	18	14	9	7
СКШ 515	1	2	5	8	13	14	11	7	6
СКШ 630	1	2	3	6	9	9	7	5	4
СКШ 700	0	2	4	6	13	16	17	15	12
СКШ 1000	0	2	4	6	13	16	17	15	12

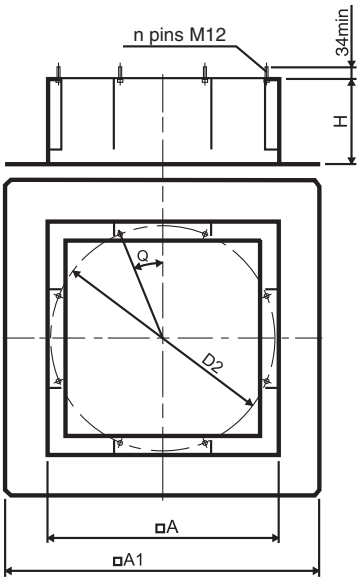

Fig. 1

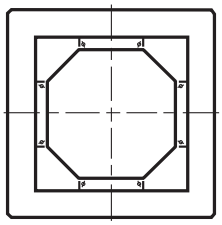

Fig. 2
See more on Fig. 1

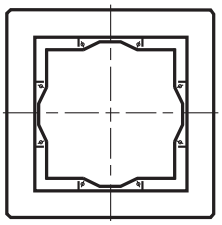

Fig. 3
See more on Fig. 1

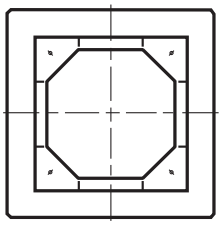

Fig. 4
See more on Fig. 1

No.	Curb Type	Fig.	Dimensions [mm]						Weight [kg]
			D2	A	A1	H	Q	n	
1	CK400	3	470	414	588	400	45°	4	23
3	CK515	3	585	494	770	400	45°	4	30
4	CK515-01	1	615	484	770	400	45°	4	29
5	CK630	2	665	674	960	400	22°30’	8	42
6	CK700	2	772	806	1096	400	22°30’	8	52
7	CK700-01	3	772	806	1096	400	22°30’	8	51
8	CK1000	1	1072	1042	1326	1000	22°30’	8	123
9	CK1000-01	2	1072	1042	1326	1000	22°30’	8	124
10	CK1000-02	4	1188	1042	1326	400	45°	4	62
12	CK1200	3	1272	1290	1572	1000	22°30’	8	196
13	CK1200-01	2	1272	1290	1572	1000	22°30’	8	200
15	CK1450	1	1522	1510	1792	600	22°30’	8	187
16	CK1450-01	2	1522	1510	1792	600	22°30’	8	191
17	CK1588	2	1757	1738	2020	400	22°30’	8	194
18	CK1772	2	1957	1922	2204	400	22°30’	8	210
19	СКШ400	1	470	404	588	500	45°	4	20
20	СКШ515	1	585	484	770	500	45°	4	37
21	СКШ515-01	1	615	484	770	500	45°	4	37
22	СКШ630	2	665	674	958	500	22°30’	8	55
23	СКШ700	2	772	806	1096	800	22°30’	8	114
24	СКШ1000	2	1072	1042	1326	800	22°30’	8	176
25	СКШ1000-02	4	1188	1042	1326	800	45°	4	178

Note:

1) Curbs may be optionally manufactured of any height. There is option for curbs mounted on inclined roof.

СКУ (SKU) Heat-Insulated Roof Fan Curbs

No.	Roof Fan Curb Type	Fig.	Dimensions [mm]						Weight [kg]
			D2	A	A1	H	Q	п	
1	СКУ400	3	470	414	588	500	45°	4	26
2	СКУ515	3	585	494	770	500	45°	4	35
3	СКУ515-01	1	615	484	770	500	45°	4	35
4	СКУ630	2	665	674	958	500	22°30'	8	53
5	СКУ700	2	772	806	1096	400	22°30'	8	56
6	СКУ700-01	3	772	806	1096	400	22°30'	8	55
7	СКУ1000	3	1072	1042	1326	1000	22°30'	8	129
8	СКУ1000-01	2	1072	1042	1326	1000	22°30'	8	130
9	СКУ1000-02	4	1118	1042	1326	400	45°	4	68
10	СКУ1200	3	1272	1290	1572	1000	22°30'	8	206
11	СКУ1200-01	2	1272	1290	1572	1000	22°30'	8	210
12	СКУ1450	1	1522	1510	1792	600	22°30'	8	218
13	СКУ1450-01	2	1522	1510	1792	600	22°30'	8	225
14	СКУ1588	2	1757	1738	2020	400	22°30'	8	216
15	СКУ1772	2	1957	1922	2204	400	22°30'	8	235

CKK (SKK) Round Roof Fan Curbs

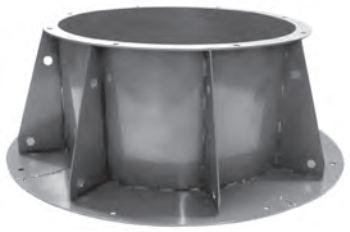

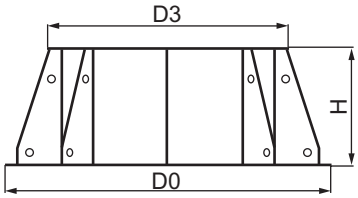

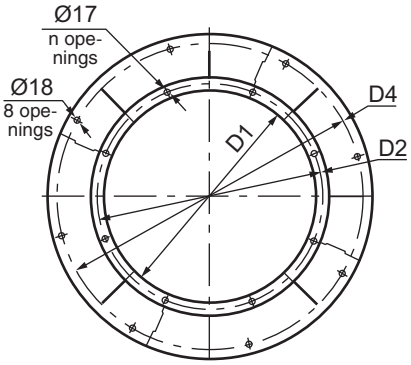

Roof Fan Curb Type	Dimensions [mm]						n	Weight [kg]
	D1	D2	D3	D4	D0	H		
CKK 400	400	470	510	560	600	400	4	12,5
CKK 515	476	585	630	730	770	400	4	24
CKK 630	616	665	710	890	950	400	8	39
CKK 700	716	772	810	1030	1100	400	8	47
CKK1000	1016	1072	1140	1280	1350	400	8	60
CKK1200	1214	1272	1340	1500	1570	600	8	112
CKK1450	1400	1522	1600	1800	1900	600	8	151
CKK1588	1600	1757	1830	2000	2100	400	8	142
CKK1772	1800	1957	2030	2200	2300	400	8	156

Applicability of the round Curb

Roof Fan Curb Type	Fans
СКК 400	ВРКШ-1,6; ВРКШ-2; ВКРВ-2,5ДУ; ВКРВ-2,8ДУ; ВКРВ-3,15ДУ; ВКРН-3,15ДУ; ВРКО-3,15
СКК 515	ВРКШ-2,5; ВРКШ-2,8; ВКРВ-3,55ДУ; ВКРВ-4ДУ; ВКРН3,55ДУ; ВКРН-4ДУ; ВО-21-210К-4ДУ; ВРКО-3,55; ВРКО-4
СКК 630	ВРКШ-3,15; ВРКШ-3,55; ВКРН-4,5ДУ; ВКРВ2х2,5ДУ; ВРКО-4,5
СКК 700	ВРКШ-4; ВРКШ-4,5; ВКРВ-4,5ДУ; ВКРВ-5ДУ; ВКРВ-5,6ДУ; ВКРН-5ДУ; ВКРН-5,6ДУ; ВКРН-6,3ДУ; ВКРН-7,1ДУ; ВО-21-210К-5ДУ; ВО-21-210К-6,3ДУ; ВРКО-5; ВРКО-6,3; ВРКО-7,1
СКК 1000	ВРКШ-5; ВРКШ-5,6; ВРКШ-6,3; ВКРВ-6,3ДУ; ВКРВ-7,1ДУ; ВКРН-8ДУ; ВКРН-9ДУ; ВО-21-210К-8ДУ; ВРКО-8; ВРКО-9
СКК 1200	ВКРВ-8ДУ; ВКРВ2х5ДУ; ВКРН-10ДУ; ВКРН-11,2ДУ; ВО-21-210К-10ДУ; ВРКО-10; ВРКО-11,2
СКК 1450	ВКРВ2х5,6ДУ; ВКРВ2х6,3ДУ; ВКРН-12,5ДУ; ВКРН-14ДУ; ВО-21-210К-12,5ДУ; ВРКО-12,5; ВРКО-14
СКК 1588	ВКРВ2х7,1ДУ
СКК 1772	ВКРВ2х8ДУ; ВО-21-210К-16ДУ

Mounting sleeves for КВОП (KVOP)

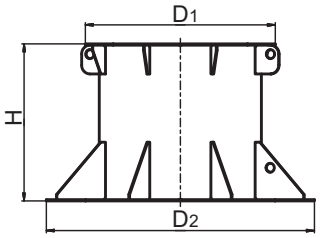

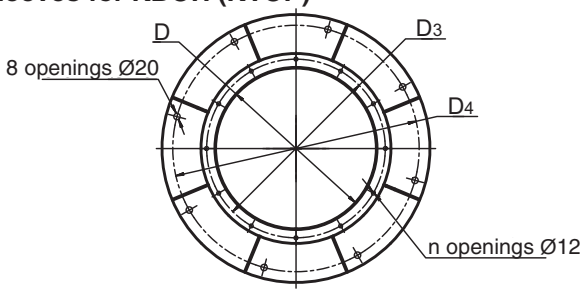

Fan Model	Roof Fan Curb Type	Dimensions [mm]						n	Weight [kg]
		D	D_1	D_2	D_3	D_4	H		
КВОП-5	СК-К-500	504	595	840	560	772	492	12	29
	СК-КО-500								34
	СКУ-КО-500								62
КВОП-6,3	СК-К-630	634	730	1140	690	1072	620	12	52
	СК-КО-630								58
	СКУ-КО-630								118
КВОП-8	СК-К-800	810	900	1140	860	1072	800	16	56
	СК-КО-800								69
	СКУ-КО-800								165
КВОП-10	СК-К-1000	1010	1110	1340	1070	1272	1000	16	83
	СК-КО-1000								106
	СКУ-КО-1000								280
КВОП-12,5	СК-К-1250	1260	1360	1590	1320	1522	1200	16	180
	СК-КО-1250								200
	СКУ-КО-1250								456

Recommendations on Roof Fans Installation

Roof fans shall be mounted from the roofing.

As an example, Fig. 1 demonstrates mounting of ВРКШ (VRKSh) fan on СК (SK) roof fan curb, and Fig. 2 demonstrates mounting on СКШ (SKSh) roof fan curb.

Fan Mounting on СК (SK) and СКШ (SKSh) Roof Fan Curbs

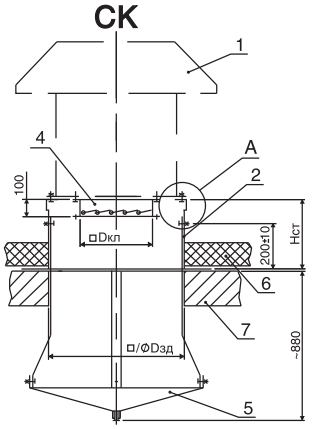

Fig. 1

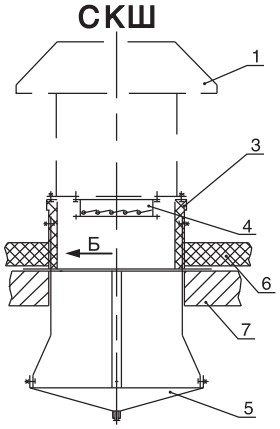

Fig. 2

1 – Fan
2 – СК (SK) roof fan curb
3 – СКШ (SKSh) roof fan curb
4 – Back-flow valve
5 – Tray
6 – Thermal and water isolation of building
7 – Load-bearing roof element

Prior to installation check correspondence of roof fan curb configuration to the mounting fan. Curb shall be mounted in an upright position as to be based upon load-bearing element of a roof aligning with □/0 Dbld opening in a roofing previously drilled acc. to the Table5 (see p.166).

Roof fan curb fastening to the load-bearing structure shall be performed in accordance with construction standards and recommendations specified in manuals and standard designs.

Mounting of return valve on a fan

Return valve shall be fastened to the fan before installation.

Inspect valve before fastening. If valve gates are fixed with transportation screws, then unscrew them. Ensure that valve gates open feely, without jamming.

During fastening valve to the fan, the fan shall be suspended. Do not put the fan up on the valve during and after installation to avoid its distortion.

Mounting of fan (with valve) on a roof fan curb

Fan is fastened to the roof fan curb by means of placing washers and M12 nuts on pins welded to the roof fan curb. Each pin must be fitted with two nuts (see reference A). Roof fan curbs are fitted with 4 or 8 M12 pins depending on nominal size. In case of BKPB2x (VKRV2x) installation, positioning of fan with valve in relation to the roof fan curb shall be performed with strict accordance with diagram provided in Appendix to the service list.

Tray Mounting

Tray shall be fastened to the roof fan curb before fan installation. Each nominal size of CK (СКШ) (SK (SKSh)) roof fan curb corresponds to the certain tray number specified in the Table 4. Tray drain is equipped with a 3/4" valve for condensate water discharge.

Before tray mounting drill 14 mm openings in the center of each side wall of the roof fan curb at a distance of 200 +/-10 mm from its base. Pan holding brackets fastening to the roof fan curb side walls shall be performed using M12 bolts, nuts and washers (see View A).

In case of tray mounting on СКШ (SKSh) roof fan curb (except for СКШ 1000 (SKSh 1000)) in addition to above steps it is required to transect and unbend the grating pressing noise absorbing material in places of 14 mm openings allocation. Push pan holding brackets between noise absorbing material and inner side of the roof fan curb side wall (see fan installation diagram for СКШ (SKSh) roof fan curb). After tray fastening resent cut parts of a grating.

Tray mounting on СКШ (SKSh) 1000 /-01 roof fan curb requires:

1) Two pan holding brackets on the sides, where the central sound suppressing cartridge is installed, shall be shortened by 250 mm and fitted with 14 mm drilled openings at a distance of 50 mm from the edge (see View Б);
2) Two side walls of the roof fan curb, where the central sound suppressing cartridge is installed, shall be fitted with two 14 mm drilled openings each at a distance of 200 +/-10 mm from roof fan curb base and 270 mm between openings;
3) Two shortened pan holding brackets shall be fastened to two mounting forks (supplied by the CVM Manufacturing Works under special order), which shall be fastened in their turn to the roof fan curb side walls.

Above works shall be performed by the customer independently or shall be approved by the manufacturer on a stage of delivery set forming.

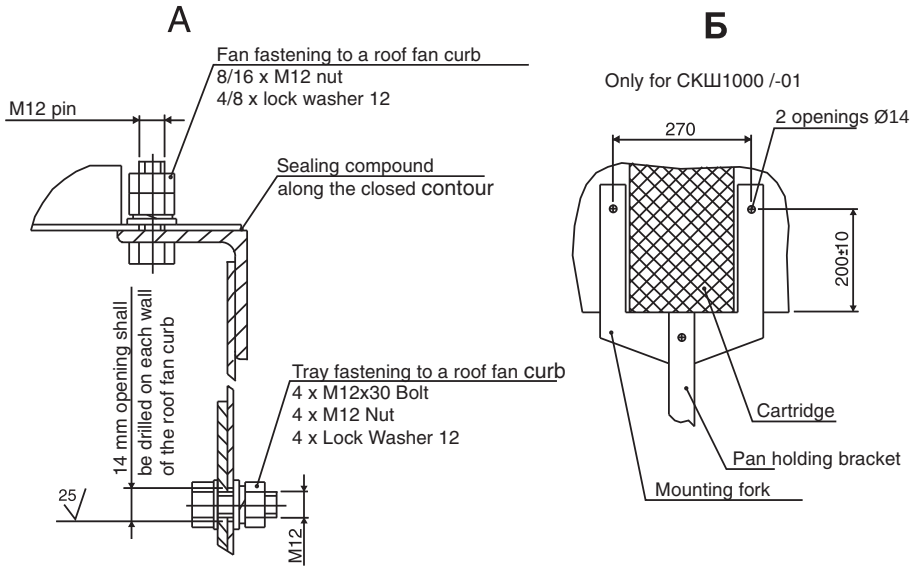

Finish Installation Work

After installation and fastening of all components the clearance between fan and roof fan curb top shall be filled by the sealing compound applied along the contour (see View A). Finish grouting mix underlayment, laying out of thermal and water insulation, installation of galvanized roof steel skirting with hose clamps along the contour shall be performed by the customer independently based on construction standards and recommendation provided in manuals and standard designs with consideration for roof fan curb height Hст specified in the Tables 5-11.

Each fan type corresponds to the certain type of roof fan curb, valve and tray indices, which are specified in the Tables 5-10 and shall be considered upon order placement.

In case of installation of smoke exhaust fans with bilateral air emission roof protection layer must be made of nonflammable material within a radius of 2 m form the roof fan curb edges.

Accessories for installation of a certain fan shall be ordered according to the following code: Fan type / Roof fan curb type / Valve index / Tray index

If indication of some accessory is not present in the code, then this accessory will not be supplied to the customer.

Order example:

ВРКШ-5-4-3 fan is completed with curb, valve, and tray. Based on the table 5 on p.166 order shall be made as follows: ВРКШ-5 / СК1000-02 or СКШ 1000 / кГ-450x450 / ПД-02; if the same ВРКШ-5-4-3 fan is completed with the curb and valve only, then based on the table 5 on p.166 we get: ВРКШ-5 / СК1000-02 / КГ-450x450.

Order example:

ВКРН-АФ-7,1ДУ-400-01-У1 fan is completed with curb, valve, and tray. Based on the table 9 on p.166 order shall be made as follows: ВКРН-7,1ДУ / СК700-01 / КЛО-630 / ПД-01; if the same ВКРН-АФ-7,1ДУ-400-01-У1 fan is completed with the curb and valve only, then based on the table 9 on p.166 we get: ВКРН-7,1 ДУ / СК700-01 / КЛО-630.

КГ (KG) Valve

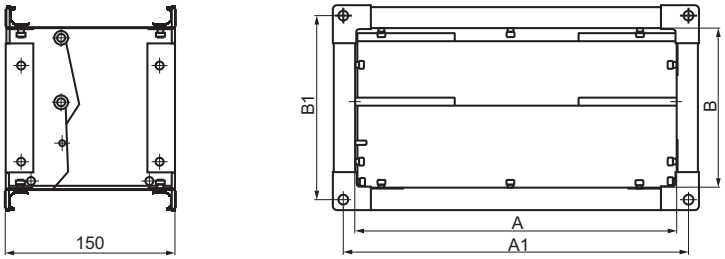

Table 1

Back-flow valve КГ (KG)						
Valve Designation	Dimensions [mm]				Applicability	Weight [kg]
	A	B	A1	B1		
КГ-200x200	200	200	220	220	ВРКШ-1,6	2,2
КГ-220x220	215	215	245	245	ВРКШ-2	2,5
КГ-270x270	270	270	300	300	ВРКШ-2,55; ВРКШ-2,8	3,2
КГ-300x150	300	150	320	170	ВРПП- 30x15; ВРПН-Н-1,6	2,7
КГ-345x345	345	345	375	375	ВРКШ-3,15; ВРКШ-3,55; ВРКШ-4	4
КГ-350x350	350	350	370	370	ВРКК-2,5	4,2
КГ-400x200	400	200	420	220	ВРПП-40x20; ВРПН-Н-1,8; ВРПН-Н-2	3,5
КГ-400x400	400	400	420	420	ВРКК-2,8	4,9
КГ-450x450	450	450	470	470	ВРКК-3,15; ВРКШ-4,5; ВРКШ-5	5,5
КГ-500x250	500	250	520	270	ВРПП-50x25; ВРПВ-Н-2; ВРПН-Н-2,25; ВРПН-Н-2,5	4,5
КГ-500x300	500	300	520	320	ВРПП-50X30; ВРПВ-Н-2,25; ВРПН-Н-2,8; ВРПН-Н-3,15	4,7
КГ-500x500	500	500	520	520	ВРКК-3,55	6,3
КГ-560x560	560	560	580	580	ВРКК-4; ВРКШ-5,6	7,2
КГ-600x300	600	300	620	320	ВРПП-60x30; ВРПВ-Н-2,5	5,3
КГ-600x350	600	350	620	370	ВРПП-60x35; ВРПВ-Н-2,8; ВРПН-Н-3,55	5,7
КГ-630x630	630	630	650	650	ВРКК-4,5	8,3
КГ-700x400	700	400	720	420	ВРПП-70x40; ВРПВ-Н-3,15; ВРПН-Н-4	6,9
КГ-710x710	710	710	730	730	ВРКК-5; ВРКШ-6,3	9,6
КГ-800x500	800	500	830	530	ВРПП-80X50; ВРПВ-Н-3,55; ВРПН-Н-4,5; ВРПН-Н-4,5	9,1
КГ-800x800	800	800	830	830	ВРКК-5,6	12,4
КГ-900x500	900	500	930	530	ВРПВ-Н-4	9,9
КГ-1000x500	1000	500	1030	530	ВРПП-100x50; ВРПН-Н-5,6	10,7

Table 2

Back-flow valve КЛ(КЛО)*							
Valve Designation	Dimensions [mm]						Weight [kg]
	$ØD_{valv}$	D4	D5	H_{valv}	d	n1	
КЛ(О)-250	250	280	300	170	7x10	3	4
КЛ(О)-280	280	310	330	190		4	4,2
КЛ(О)-315	315	345	365	190			4,5
КЛ(О)-355	355	385	405	240			6,9
КЛ(О)-400	400	430	450	240			8
КЛ(О)-450	450	480	500	260		5	9,6
КЛ(О)-500	500	530	550	290			10,9
КЛ(О)-560	560	590	610	323	10x15	6	13,2
КЛ(О)-630	630	660	680	357			16,3
КЛ(О)-710	710	740	760	397			20,6
КЛ(О)-800	800	830	850	435			24,6
КЛ(О)-900	900	940	964	500		8	32
КЛ(О)-1000	1000	1040	1064	545			50
КЛ(О)-1120	1120	1165	1192	610	12x18	9	55
КЛ(О)-1250	1250	1295	1322	680			64
КЛ(О)-1510	1510	1555	1586	810	12	13	75,5
КЛ(О)-1600	1600	1648	1672	880	12x18		107
КЛ(О)-1680	1680	1728	1752	880	12		108

Note: Heat insulated version КЛ-У (KL-U) is available.

КЛ(О)* (KL(O)) Valve

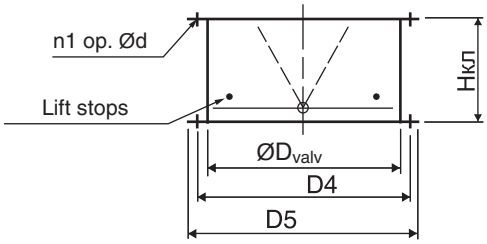

* with blades lift stop

KO (KO) Valve

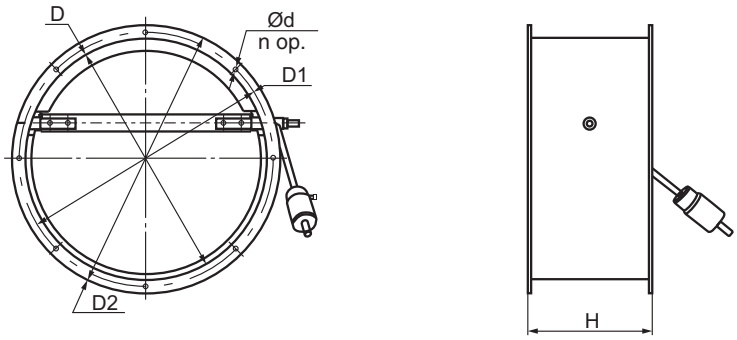

Table 3

Back-flow valve KO (KO)								
Valve Designation	Dimensions [mm]						Applicability	Weight [kg]
	D	D1	D2	H	d	n		
KO-250	254	274	290	210	7	8	ВР-2,5ДУ	5,7
KO-260	260	280	300	210	7	8	ВКРВ-2,5ДУ	5,9
KO-290	290	310	330	210	7	8	ВКРВ-2,8ДУ	6,6
KO-320	325	345	360	210	7	8	ВКРН-3,15ДУ; ВКРВ-3,15ДУ; ВР-3,15ДУ	7,2
KO-360	365	385	400	210	7	8	ВКРН-3,55ДУ; ВКРВ-3,55ДУ	8,1
KO-400	410	430	450	210	7	8	ВКРН-4ДУ; ВКРВ-4ДУ; ВР-4ДУ; ВО-4	8,9
KO-450	460	480	500	220	7	8	ВКРН-4,5ДУ; ВКРВ-4,5ДУ	11,6
KO-500	510	530	550	330	7	8	ВКРН-5ДУ; ВКРВ-5ДУ; ВО-5ДУ; ВР-5ДУ	14,2
KO-510	504	560	580	350	12	12	УВОП-5	15,9
KO-550	563	620	640	350	12	12	УВОП-Д-5	18,5
KO-570	570	590	610	400	10	8	ВКРН-5,6ДУ; ВКРВ-5,6ДУ	19,8
KO-600	640	660	690	450	10	16	ВКРН-6,3ДУ; ВКРВ-6,3ДУ; ВР-6,3ДУ; ВКРН-7,1ДУ	21,8
KO-630	634	690	720	450	12	16	УВОП-6,3; ВО-6,3ДУ	23,7
KO-650	713	770	800	470	12	12	УВОП-Д-6,3	24,6
KO-700	720	740	770	480	10	8	ВКРВ-7,1ДУ	26,7
KO-800	810	850	880	500	10	16	ВКРН-8ДУ; ВКРВ-8ДУ; ВР-8ДУ	30,8
KO-810	806	860	890	500	12	16	УВОП-8; ВО-8ДУ	33,7
KO-900	904	960	990	530	12	16	УВОП-Д-8	37,1
KO-910	910	940	970	550	10	16	ВКРН-9ДУ	39,9
KO-1000	1015	1040	1070	550	12	16	ВКРН-10ДУ; ВР-10ДУ	43,5
KO-1050	1006	1070	1100	550	12	16	УВОП-10; ВО-10ДУ	46,6
KO-1070	1123	1190	1220	580	12	16	УВОП-Д-10	48,6
KO-1100	1135	1165	1190	620	12	8	ВКРН-11,2ДУ	50,7
KO-1250	1270	1295	1360	650	12	24	ВКРН-12,5ДУ; ВР-12,5ДУ; ВКРН-14ДУ	61,7
KO-1270	1256	1320	1370	650	12	16	УВОП-12,5; ВО-12,5ДУ	63,5
KO-1280	1407	1470	1500	700	12	16	УВОП-Д-12,5	64,4
KO-1600	1620	1675	1700	750	12	24	ВО-16ДУ	91,7

Note: Heat insulated version KO-У (KO-U) is available.

Table 4

Tray			
Tray Designation	Dimensions [mm]		Weight [kg]
	D_{tray}	□$D1_{tray}$	
ПД-00	400	700	13
ПД-01	700	990	22
ПД-02	1200	1360	30
ПД-03	1450	1610	41

Tray

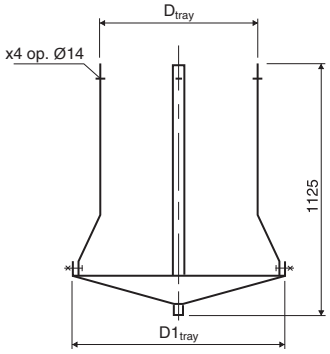

Table 5

ВРКШ (VRKSh) Fan Type	Roof Fan Curb Type		Valve Index	Tray Index	□/Ø $D_{зд}$, [mm]
		$H_{ст}$, [mm]			
ВРКШ-1,6	СК400 или СКШ400	500	КГ-200x200	ПД-00	400
ВРКШ-2			КГ-220x220		
ВРКШ-2,5	СК515 или СКШ515		КГ-270x270		470
ВРКШ-2,8	СК515-01 или СКШ515-01				
ВРКШ-3,15	СК630 или СКШ630		КГ-345x345	ПД-01	700
ВРКШ-3,55					
ВРКШ-4	СК700 или СКШ700	800			790
ВРКШ-4,5			КГ-450x450		
ВРКШ-5	СК1000-02 или СКШ1000			ПД-02	1030
ВРКШ-5,6	СК1000-01 или СКШ1000		КГ-560x560		
ВРКШ-6,3	СК1000 или СКШ1000		КГ-710x710		

Table 6

ВРКО (VRKO) Fan Type	Roof Fan Curb Type		Valve Index	Tray Index	□/Ø $D_{зд}$, [mm]
		$H_{ст}$, [mm]			
ВРКО-3,15	СК400	400	КЛ-315	ПД-00	400
ВРКО-3,55	СК515		КЛ-355		470
ВРКО-4			КЛ-400		
ВРКО-4,5	СК630		КЛ-450		700
ВРКО-5	СК700-01		КЛ-500	ПД-01	790
ВРКО-6,3			КЛ-630		
ВРКО-7,1					
ВРКО-8	СК1000	1000	КЛ-800	ПД-02	1030
ВРКО-9			КЛ-900		
ВРКО-10	СК1200		КЛ-1000	ПД-03	1270
ВРКО-11,2			КЛ-1120		
ВРКО-12,5	СК1450	600	КЛ-1250		1500
ВРКО-14			КЛ-1250		

Table 7

ВОКШ (VOKSH) Fan Type	Roof Fan Curb Type		Valve Index	Tray Index	□/Ø $D_{зд}$, [mm]
		$H_{ст}$, [mm]			
ВОКШ-5	СК630 или СКШ630	500	КЛ-500	ПД-01	700
ВОКШ-8	СК1000-01 или СКШ1000	800	КЛ-800	ПД-02	1030
ВОКШ-10	СК1200-01 или СКШ1200	800	КЛ-1000	ПД-03	1270

Table 8

ВКРВ (VKRV) Fan Type	Roof Fan Curb Type		Valve Index	Tray Index	□/Ø $D_{зд}$, [mm]
		$H_{ст}$, [mm]			
ВКРВ-2,5ДУ	СК400	400	КЛО-250	ПД-00	400
ВКРВ-2,8ДУ	СК400		КЛО-280		
ВКРВ-3,15ДУ			КЛО-315		
ВКРВ-3,55ДУ	СК515		КЛО-355		470
ВКРВ-4ДУ			КЛО-400		
ВКРВ-4,5ДУ	СК700		КЛО-450	ПД-01	790
ВКРВ-5ДУ			КЛО-500		
ВКРВ-5,6ДУ			КЛО-560		
ВКРВ-6,3ДУ	СК1000-01		КЛО-630	ПД-02	1030
ВКРВ-7,1ДУ			КЛО-710		
ВКРВ-8ДУ	СК1200-01	600	КЛО-800	ПД-03	1270
ВКРВ2x2,5ДУ	СК630	400	КЛО-560	ПД-01	700
ВКРВ2x5ДУ	СК1200-01	600	КЛО-1000	ПД-03	1270
ВКРВ2x5,6ДУ	СК1450-01		КЛО-1250		1500
ВКРВ2x6,3ДУ					
ВКРВ2x7,1ДУ	СК1588	400	КЛО-1510	—	1685
ВКРВ2x8ДУ	СК1772		КЛО-1680	—	1900

Table 9

ВКРН* (VKRN) Fan Type	Roof Fan Curb Type		Valve Index	Tray Index	□/Ø $D_{зд}$, [mm]
		$H_{ст}$, [mm]			
ВКРН-3,15ДУ	СК400	400	КЛО-315	ПД-00	400
ВКРН-3,55ДУ	СК515		КЛО-355		470
ВКРН-4ДУ			КЛО-400		
ВКРН-4,5ДУ	СК630		КЛО-450	ПД-01	700
ВКРН-5ДУ	СК700		КЛО-500		790
ВКРН-5,6ДУ			КЛО-560		
ВКРН-6,3ДУ	СК700-01		КЛО-630		
ВКРН-7,1ДУ					

Continuation of table 9

ВКРН-8ДУ	СК1000		КЛО-800	ПД-02	1030
ВКРН-9ДУ	СК1000		КЛО-900		
ВКРН-10ДУ	СК1200	600	КЛО-1000	ПД-03	1270
ВКРН-11,2ДУ	СК1200		КЛО-1120		
ВКРН-12,5ДУ	СК1450		КЛО-1250		1500
ВКРН-14ДУ					

Notes: *) Means all fan modifications;

Table 10

В0-21-210К* (VO-21-210K) Fan Type	Roof Fan Curb Type		Valve Index	Tray Index	□/Ø $D_{зд}$, [mm]
		Нст, [mm]			
ВО-21-210К-4ДУ	СК515	400	КЛ-400	ПД-00	470
ВО-21-210К-5ДУ	СК700		КЛ-500	ПД-01	790
ВО-21-210К-6,3ДУ			КЛ-630		
ВО-21-210К-8ДУ	СК1000-01		КЛ-800	ПД-02	1030
ВО-21-210К-10ДУ	СК1200-01	600	КЛ-1000	ПД-03	1270
ВО-21-210К-12,5ДУ	СК1450-01		КЛ-1250		1500
ВО-21-210К-16ДУ	СК1772	400	КЛ-1600	—	1900

Notes: *) Means all fan modifications;

Table 11

КВОП (KVOP) Fan Type	Tray Index
КВОП-5; КВОП-6,3	ПД-00
КВОП-8	ПД-01
КВОП-10	ПД-02
КВОП-12,5	ПД-03

Accessories for Wall-Mounted Fan Installation

ВРП ДУ (VRP DU) wall-mounted smoke exhaust fans may be completed with the following accessories, which are recommended to be used during equipment installation:

- Mounting brackets;
- Canopy gate;
- Attachment.

Each fan is completed with 2 mounting brackets:

- «Right-hand» (in numerator);
- «Left-hand» (in denominator).

Application	Mounting Bracket*	Masked Inlet Damper	Outdoor Air Hood
	Notation	Notation	Notation
ВРП-А/Б-3,15ДУ-01	ВРП-3,15В1/ВРП-3,15В2	КК-3,15ДУ	П-3,15ДУ
ВРП-А/Б-3,15ДУ-02			
ВРП-А/Б-3,15ДУ-03	ВРП-3,15Н1/ВРП-3,15Н2		
ВРП-А/Б-3,35ДУ-01	ВРП-3,55В1/ВРП-3,55В2	КК-3,55ДУ	П-4ДУ
ВРП-А/Б-3,35ДУ-02			
ВРП-А/Б-3,35ДУ-03	ВРП-3,55Н1/ВРП-3,55Н2		
ВРП-А/Б-4ДУ-01	ВРП-4В1/ВРП-4В2	КК-4ДУ	П-4ДУ
ВРП-А/Б-4ДУ-02			
ВРП-А/Б-4ДУ-03	ВРП-4Н1/ВРП-4Н2		
ВРП-А/Б-4,5ДУ-01	ВРП-4,5В1/ВРП-4,5В2	КК-4,5ДУ	П-4ДУ
ВРП-А/Б-4,5ДУ-02			
ВРП-А/Б-4,5ДУ-03	ВРП-4,5Н1/ВРП-4,5Н2		
ВРП-А/Б-5ДУ-01	ВРП-5В1/ВРП-5В2	КК-5ДУ	П-5,6ДУ
ВРП-А/Б-5ДУ-02			
ВРП-А/Б-5ДУ-03	ВРП-5Н1/ВРП-5Н2		
ВРП-А/Б-5,6ДУ-01	ВРП-5,6В1/ВРП-5,6В2	КК-5,6ДУ	П-5,6ДУ
ВРП-А/Б-5,6ДУ-02			
ВРП-А/Б-5,6ДУ-03	ВРП-5,6Н1/ВРП-5,6Н2		
ВРП-А/Б-6,3ДУ-01	ВРП-6,3В1/ВРП-6,3В2	КК-6,3ДУ	П-5,6ДУ
ВРП-А/Б-6,3ДУ-02			
ВРП-А/Б-6,3ДУ-03	ВРП-6,3Н1/ВРП-6,3Н2		
ВРП-А/Б-7,1ДУ-01	ВРП-7,1В1/ВРП-7,1В2	КК-7,1ДУ	П-8ДУ
ВРП-А/Б-7,1ДУ-02			
ВРП-А/Б-7,1ДУ-03	ВРП-7,1Н1/ВРП-7,1Н2		
ВРП-А/Б-8ДУ-01	ВРП-8В1/ВРП-8В2	КК-8ДУ	П-8ДУ
ВРП-А/Б-8ДУ-02			
ВРП-А/Б-8ДУ-03	ВРП-8Н1/ВРП-8Н2		

Rainscreen	
Application	**Notation**
ВКРН-АП(АД)-3,15ДУ	ЗПД-3,15А
ВКРН-БП(БД)-3,15ДУ	ЗПД-3,15Б
ВКРН -АП (АД) -3,55ДУ	ЗПД-3,55А
ВКРН-БП(БД)-3,55ДУ	ЗПД-3,55Б
ВКРН-АП(АД)-4ДУ	ЗПД-4А
ВКРН-БП(БД)-4ДУ	ЗПД-4Б
ВКРН-АП(АД)-4,5ДУ	ЗПД-4,5А
ВКРН-БП(БД)-4,5ДУ	ЗПД-4,5Б
ВКРН-АП(АД)-5ДУ	ЗПД-5А
ВКРН-БП(БД)-5ДУ	ЗПД-5Б
ВКРН-АП(АД)-5,6ДУ	ЗПД-5,6А
ВКРН-БП(БД)-5,6ДУ	ЗПД-5,6Б
ВКРН-АП(АД)-6,3ДУ	ЗПД-6,3А
ВКРН-БП(БД)-6,3ДУ	ЗПД-6,3Б
ВКРН-АП (АД)-7,1 ДУ	ЗПД-7,1 А
ВКРН-БП(БД)-7,1 ДУ	ЗПД-7,1 Б
ВКРН-ВП(ВД)-7,1 ДУ	ЗПД-7,1А
ВКРН-АП(АД)-8ДУ	ЗПД-8А
ВКРН-БП(БД)-8ДУ	ЗПД-8Б
ВКРН-ВП(ВД)-8ДУ	ЗПД-8А
ВКРН-АП(АД)-9ДУ	ЗПД-9А
ВКРН-БП(БД)-9ДУ	ЗПД-9Б
ВКРН-АП(АД)-10ДУ	ЗПД-10А
ВКРН-БП(БД)-10ДУ	ЗПД-10Б
ВКРН-АП(АД)-11,2ДУ	ЗПД-11,2А
ВКРН-БП(БД)-11,2ДУ	ЗПД-11,2Б
ВКРН-ВП(ВД)-11,2ДУ	ЗПД-11,2А
ВКРН-АП(АД)-12,5ДУ	ЗПД-12,5А
ВКРН-БП(БД)-12,5ДУ	ЗПД-12,5Б
ВКРН-ВП(ВД)-12,5ДУ	ЗПД-12,5А
ВКРН-АП(АД)-14ДУ	ЗПД-14А
ВКРН-БП(БД)-14ДУ	ЗПД-14Б

Notes:
1) Each fan requires 2 screens.

BP (VR) and BO (VO) fans (except for BO-K (VO-K)) are operated in accordance with 2nd category of location (GOST 15150-69), i.e. under hood, or indoors. First category of location (outdoor) requires implementation of additional structures providing weather protection. For VR-series fans these structures are represented by the КДВ (KDV) hood, protecting motor, and KBP (KVR) cover protecting inner space of a fan. For VO-series fans protective structures are represented by the shield KBO (KVO) deflecting slanting rain.

КДВ (KDV) Hood

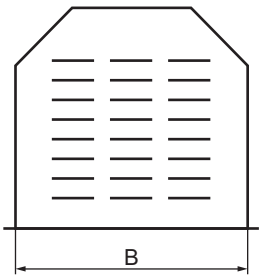

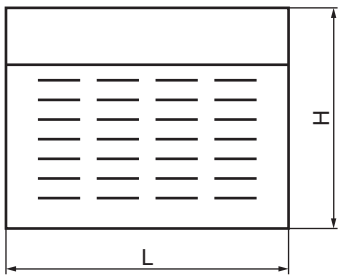

Hood Designation	Dimensions [mm]			Weight [kg]	Applicability	
	L	H	B		Motor	Fan
КДВ-56	143	238	368	4,3	АИР-56	ВР-80-70-2,5ДУ-00, ВР-80-70-3,15ДУ-00, ВР-80-75-2,5-02
КДВ-63	163	270	378	5,2	АИР-63	ВР-80-70-2,5ДУ-01, ВР-80-70-4ДУ-00, ВР-80-75-3,15-04, ВР-80-75-4-04, ВР-280-46-2,5-00
КДВ-71	193	285	390	5,8	АИР-71	ВР-80-70-4ДУ-01, ВР-80-70-5ДУ-00, ВР-80-75-2,5-21, ВР-80-75-5-03, ВР-280-46-2,5-01, ВР-280-46-2,5ДУ-00, ВР-280-46-2,5-02, ВР-280-46-3,15-00, ВР-280-46-3,15-01, ВР-120-28-5-00
КДВ-80	233	304	402	6,5	АИР-80	ВР-80-70-3,15ДУ-01, ВР-80-75-3,15-16, ВР-280-46-3,15ДУ-00, ВР-280-46-3,15ДУ-01, ВР-280-46-2,5-03, ВР-280-46-3,15-02, ВР-280-46-3,15-03, ВР-280-46-3,15-04, ВР-280-46-4-00, ВР-140-40-2,5-00, ВР-120-28-5-01, ВР-120-28-5-02
КДВ-90	283	340	418	7,9	АИР-90	ВР-80-70-5ДУ-01, ВР-80-75-6,3-02.1, ВР-280-46-2,5ДУ-01, ВР-280-46-3,15ДУ-02, ВР-280-46-4ДУ-00, ВР-280-46-2,5-04, ВР-280-46-3,15-05, ВР-280-46-4-01, ВР-140-40-3,15-00, ВР-120-28-6,3-00
КДВ-100	308	360	438	8,7	АИР-100S	ВР-80-75-5-22, ВР-280-46-2,5-05, ВР-140-40-3,15-01, ВР-120-28-6,3-01
КДВ-100-01	308	360	438	8,9	АИР-100L	ВР-80-70-6,3ДУ-00, ВР-280-46-2,5-06, ВР-280-46-2,5ДУ-02, ВР-280-46-4ДУ-01, ВР-280-46-4-02, ВР-280-46-4-03, ВР-140-40-4-00, ВР-120-28-5-03, ВР-120-28-6,3-02, ВР-120-28-8-00
КДВ-112	358	390	468	10,1	АИР-112	ВР-80-70-6,3ДУ-01, ВР-80-70-8ДУ-00, ВР-80-75-4-31, ВР-80-75-8-00, ВР-280-46-4ДУ-02, ВР-280-46-4-04, ВР-280-46-5-00, ВР-140-40-4-01, ВР-120-28-5-04, ВР-120-28-8-01, ВР-120-28-8-02, ВР-120-28-8-03
КДВ-132	393	435	494	11,7	АИР-132S	ВР-80-70-8ДУ-01, ВР-80-75-10-00.2, ВР-280-46-4ДУ-03, ВР-280-46-5ДУ-00, ВР-280-46-4-05, ВР-280-46-5-01, ВР-280-46-6,3-00, ВР-140-40-5-00, ВР-120-28-8-04, ВР-120-28-10-00
КДВ-132-01	433	435	494	12,5	АИР-132M	ВР-80-75-6,3-22, ВР-280-46-5ДУ-01, ВР-280-46-5ДУ-02, ВР-280-46-6,3ДУ-00, ВР-280-46-5-02, ВР-280-46-5-03, ВР-280-46-6,3-01, ВР-140-40-5-01, ВР-140-40-6,3-00, ВР-120-28-5-05, ВР-120-28-8-05, ВР-120-28-10-01
КДВ-160	538	510	532	15,2	АИР-160S	ВР-80-70-10ДУ-00, ВР-280-46-5ДУ-03, ВР-280-46-6,3ДУ-01, ВР-280-46-5-04, ВР-280-46-6,3-02, ВР-280-46-6,3-04, ВР-140-40-6,3-01, ВР-120-28-6,3-03, ВР-120-28-8-06, ВР-120-28-10-02
КДВ-160-01	583	510	532	15,9	АИР-160M	ВР-80-75-8-20, ВР-280-46-6,3ДУ-02, ВР-280-46-6,3ДУ-03, ВР-280-46-5-05, ВР-280-46-6,3-03, ВР-280-46-6,3-05, ВР-120-28-6,3-04, ВР-120-28-10-03
КДВ-180	623	545	557	18,5	АИР-180S	ВР-280-46-5ДУ-04, ВР-280-46-5-06, ВР-140-40-8-01, ВР-120-28-6,3-05, ВР-120-28-10-04
КДВ-180-01	663	545	557	19,1	АИР-180M	ВР-80-70-10ДУ-01, ВР-280-46-5-07, ВР-280-46-6,3-06, ВР-280-46-8-00, ВР-140-40-8-01, ВР-120-28-6,3-06, ВР-120-28-10-05
КДВ-200	723	570	596	22,9	АИР-200M	ВР-80-75-10-20, ВР-280-46-6,3ДУ-04, ВР-280-46-8ДУ-00, ВР-280-46-6,3-07, ВР-280-46-8-01, ВР-120-28-10-06
КДВ-200-01	723	570	596	23,2	АИР-200L	ВР-80-70-12,5ДУ-00, ВР-80-75-12,5-06, ВР-280-46-6,3-08, ВР-280-46-8-02, ВР-280-46-8-05
КДВ-225	743	650	636	26,1	АИР-225	ВР-80-70-12,5ДУ-01, ВР-280-46-8-03, ВР-280-46-8-06, ВР-280-46-8ДУ-01
КДВ-250	768	705	684	28,7	АИР-250S	ВР-80-75-12,5-13, ВР-280-46-8-04, ВР-280-46-8-07, ВР-280-46-8ДУ-02
КДВ-250-01	843	705	684	30,5	АИР-250M	ВР-280-46-8-08
КДВ-280	948	770	735	36	АИР-280S	ВР-280-46-8-09

KBP (KVR) Cover

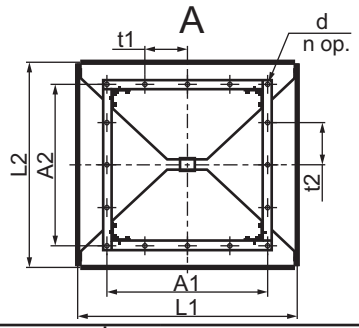

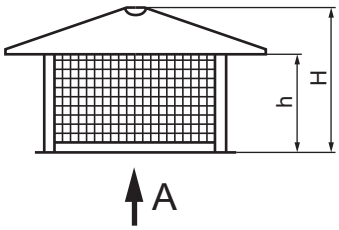

Roof Designation	Dimensions [mm]										Weight [kg]	Applicability
	L1	L2	H	h	A1	A2	t1	t2	d	n		
KBP-2,5	339	308	247	197	205	205	100	100	7	8	2,1	BP-80-70-2,5ДУ, BP-80-75-2,5, BP-280-46-2,5, BP-280-46-2,5ДУ
KBP-2,5-01	302	271	237	197	168	168	65	65	7	8	1,7	BP-140-40-2,5
KBP-3,15	389	358	259	197	255	255	100	100	7	12	2,7	BP-80-70-3,15ДУ, BP-80-75-3,15, BP-280-46-3,15, BP-280-46-3,15ДУ
KBP-3,15-01	355	324	250	197	221	221	84	75	7	12	2,4	BP-140-40-3,15
KBP-4	444	413	272	197	310	310	100	100	7	12	3,8	BP-80-70-4ДУ, BP-80-75-4, BP-280-46-4, BP-280-46-4ДУ
KBP-4-01	419	388	266	197	285	285	110	95	7	12	3,4	BP-140-40-4
KBP-5	514	483	288	197	380	380	100	100	7	16	5,4	BP-80-70-5ДУ, BP-80-75-5, BP-280-46-5, BP-280-46-5ДУ
KBP-5-01	476	445	280	197	342	342	100	100	7	16	4,5	BP-140-40-5
KBP-5-02	384	303	257	197	250	200	100	100	15	10	2,4	BP-120-28-5
KBP-6,3	604	573	311	197	470	470	100	100	7	16	7,8	BP-80-70-6,3ДУ, BP-80-75-6,3, BP-280-46-6,3, BP-280-46-6,3ДУ
KBP-6,3-01	552	521	298	197	418	418	100	100	7	16	6,4	BP-140-40-6,3
KBP-6,3-02	432	343	270	197	300	240	100	120	15	10	3,2	BP-120-28-6,3
KBP-8	734	703	343	197	600	600	150	150	12	16	12,9	BP-80-70-8ДУ, BP-80-75-8, BP-280-46-8, BP-280-46-8ДУ
KBP-8-01	654	623	323	197	520	520	100	100	12	16	9,3	BP-140-40-8
KBP-8-02	514	403	289	197	380	300	100	100	24	14	4,6	BP-120-28-8
KBP-10	884	853	379	197	750	750	150	150	12	24	17,7	BP-80-70-10ДУ, BP-80-75-10, BP-280-46-10
KBP-10-01	594	463	309	197	460	360	120	120	24	14	6,3	BP-120-28-10
KBP-12,5	1064	1033	423	197	930	930	150	150	12	24	26,3	BP-80-70-12,5ДУ, BP-80-75-12,5, BP-280-46-12,5

KBO (KVO) Shield

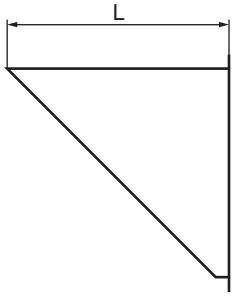

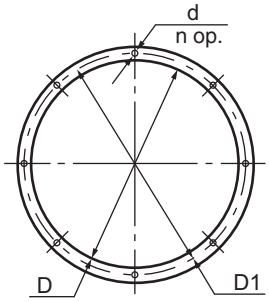

Shield Designation	Dimensions [mm]					Weight [kg]	Applicability
	L	D	D1	d	n		
KBO-4	435	405	430	8	8	4,3	BO-21-210-4ДУ, BO-12-300-4
KBO-5	535	505	530	8	10	6,3	BO-21-210-5ДУ, BO-12-300-5
KBO-5-01	535	505	560	12	12	7,1	УВОП-5
KBO-5-02	756	726	760	12	12	11,9	УВОП-К-5
KBO-6,3	670	640	690	12	12	10,5	BO-21-210-6,3ДУ, УВОП-6,3, BO-30-160-6,3, BO-12-300-6,3
KBO-6,3-01	920	887	920	12	12	23,4	УВОП-К-6,3
KBO-8	840	810	860	10	12	21,4	BO-21-210-8ДУ, УВОП-8, BO-30-160-8, BO-25-188-8, BO-12-300-8
KBO-8-01	1050	1020	1050	12	16	29,9	УВОП-К-8
KBO-10	1040	1008	1070	12	16	31,4	BO-21-210-10ДУ, УВОП-10, BO-30-160-10, BO-25-188-10, BO-12-300-10
KBO-10-01	1380	1350	1380	12	16	51,6	УВОП-К-10
KBO-12,5	1290	1260	1320	12	16	48,5	BO-21-210-12,5ДУ, УВОП-12,5, BO-30-160-12,5, BO-25-188-12,5, BO-12-300-12,5
KBO-12,5-01	1740	1706	1740	12	16	80,6	УВОП-К-12,5
KBO-16	1650	1620	1675	12	16	77,8	BO-21-210-16ДУ

ДО (DO) Spring Mounts

Overall and connecting dimensions of DO spring mount [mm]:

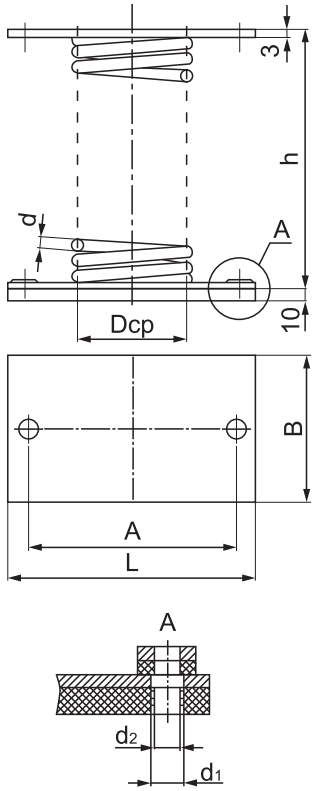

Type	Load [kg]		Vertical Rigidity [kg/cm]	Height in unloaded condition H [mm]	Spring Compression under Load [mm]		Weight [kg]	Dimensions [mm]						
	Working (Рраб.)	Maxim-um (Рпр.)			Рраб.	Рпр.		L	A	B	DCP	d	d1	d2
ДО-38	12,4	15,5	4,57	77	27	33,7	0,29	100	70	60	30	3	12	8,5
ДО-39	22,3	27,8	6,2	97,5	36	45	0,41	110	80	70	40	4	12	8,5
ДО-40	34,6	43,2	8,3	123	41,7	52	0,94	130	100	90	50	5	12	8,9
ДО-41	55	68,7	12,65	138	43,4	54	1,03	130	100	90	54	6	14	10,5
ДО-42	96	120	16,8	180	57,2	72	1,79	150	120	110	72	8	14	10,5
ДО-43	168	210	30	202	56	70	2,46	160	130	120	80	10	14	10,5
ДО-44	243	303,7	36,4	236	66,5	83	3,74	180	150	140	96	12	14	10,5
ДО-45	380	475	45	291	75	91	6,58	220	180	170	120	15	14	10,5

Fan	Type of vibration isolator	
ВР-80-70-2,5ДУ	ДО-38	—
ВР-80-70-2,8ДУ	ДО-38	—
ВР-80-70-3,15ДУ	ДО-38	—
ВР-80-70-3,55ДУ	ДО-38	—
ВР-80-70-4ДУ	ДО-39	—
ВР-80-70-4,5ДУ	ДО-39	—
ВР-80-70-5ДУ	ДО-40	—
ВР-80-70-5,6ДУ	ДО-40	ДО-39
ВР-80-70-6,3ДУ	ДО-41	ДО-39
ВР-80-70-7,1ДУ	ДО-41	ДО-40
ВР-80-70-8ДУ	ДО-42	ДО-41
ВР-80-70-9ДУ	ДО-43	ДО-42
ВР-80-70-10ДУ	ДО-43	ДО-42
ВР-80-70-11,2ДУ	ДО-44	ДО-43
ВР-80-70-12,5ДУ	ДО-44	ДО-43
Quantity of vibration isolators	4	6

Fan	Type of vibration isolator	
ВР-280-46-2,5ДУ	ДО-38	—
ВР-280-46-2,8ДУ	ДО-38	—
ВР-280-46-3,15ДУ	ДО-38	—
ВР-280-46-3,55ДУ	ДО-38	—
ВР-280-46-4ДУ	ДО-40	ДО-39
ВР-280-46-4,5ДУ	ДО-41	ДО-40
ВР-280-46-5ДУ	ДО-42	ДО-41
ВР-280-46-5,6ДУ	ДО-42	ДО-41
ВР-280-46-6,3ДУ	ДО-42	ДО-41
ВР-280-46-7,1ДУ	ДО-43	ДО-42
ВР-280-46-8ДУ	ДО-43	ДО-42
Quantity of vibration isolators	4	6

Fan	Type of vibration isolator	
BP-80-75-2,5	ДО-38	—
BP-80-75-3,15	ДО-38	—
BP-80-75-4 (00÷24)	ДО-38	—
BP-80-75-4 (25÷33)	ДО-39	—
BP-80-75-5	ДО-40	ДО-39
BP-80-75-6,3	ДО-41	ДО-40
BP-80-75-8	ДО-42	ДО-41
BP-80-75-10	ДО-43	ДО-42
BP-80-75-12,5	ДО-44	ДО-43
Quantity of vibration isolators	4	6

Fan	Type of vibration isolator	
BP-280-46-2,5	ДО-38	—
BP-280-46-3,15	ДО-38	—
BP-280-46-4 (00÷03)	ДО-39	—
BP-280-46-4 (04÷05)	ДО-40	ДО-39
BP-280-46-5(00÷03)	ДО-41	ДО-40
BP-280-46-5(04÷07)	ДО-42	ДО-41
BP-280-46-6,3 (00, 01)	ДО-41	ДО-40
BP-280-46-6,3 (02÷04)	ДО-42	ДО-41
BP-280-46-6,3 (05÷08)	ДО-43	ДО-42
BP-280-46-8 (00÷06)	ДО-43	ДО-42
BP-280-46-8 (07÷09)	ДО-44	ДО-43
Quantity of vibration isolators	4	6

Fan	Type of vibration isolator	
BP-140-40-2,5	ДО-38	—
BP-140-40-3,15	ДО-38	—
BP-140-40-4	ДО-39	—
BP-140-40-5	ДО-41	ДО-40
BP-140-40-6,3	ДО-42	ДО-41
BP-140-40-8	ДО-42	ДО-41
Quantity of vibration isolators	4	6

Fan	Type of vibration isolator	
BP-120-28-5 (00÷02)	ДО-39	—
BP-120-28-5 (03÷05)	ДО-40	ДО-39
BP-120-28-6,3 (00÷02)	ДО-40	ДО-39
BP-120-28-6,3 (03÷06)	ДО-42	ДО-41
BP-120-28-8 (00÷02)	ДО-41	ДО-40
BP-120-28-8 (03÷06)	ДО-42	ДО-41
BP-120-28-10	ДО-43	ДО-42
Quantity of vibration isolators	4	6

CVM Manufacturing Works produces flexible ducts for connection of various types of fans to the ductwork with round, rectangular, or square ducts.
Flexible ducts are available in general-purpose, heat-resistant, acid-proof (for ВРПН-Н ВК (VRPN-N VK)), corrosion-proof, and frost-resistant versions.
Flexible ducts are flange-mounted. Flexible ducts used with ducted fans ВРКК (VRKK) with radial flange may be mounted on “nipple”.
Heat-resistant ducts may be used as thermal expansion absorbers in the ductwork of smoke-exhaust systems and other systems transferring air at the temperature over 100 °C (SP 7.13130.2013 "HVAC. Fire Safety Requirements”).

Example of a duct reference designation:

В Г Т - 175x175 - Н
- Н – Nipple mounting;
- 175x175 – Duct No. (1, 2, 3, or 4 acc. to the table);
- Т – heat-resistant, К – acid-proof, М – frost-resistant, Кр – corrosion-proof;
- Г – Flexible;
- В – Duct.

Square-Section Flexible Ducts

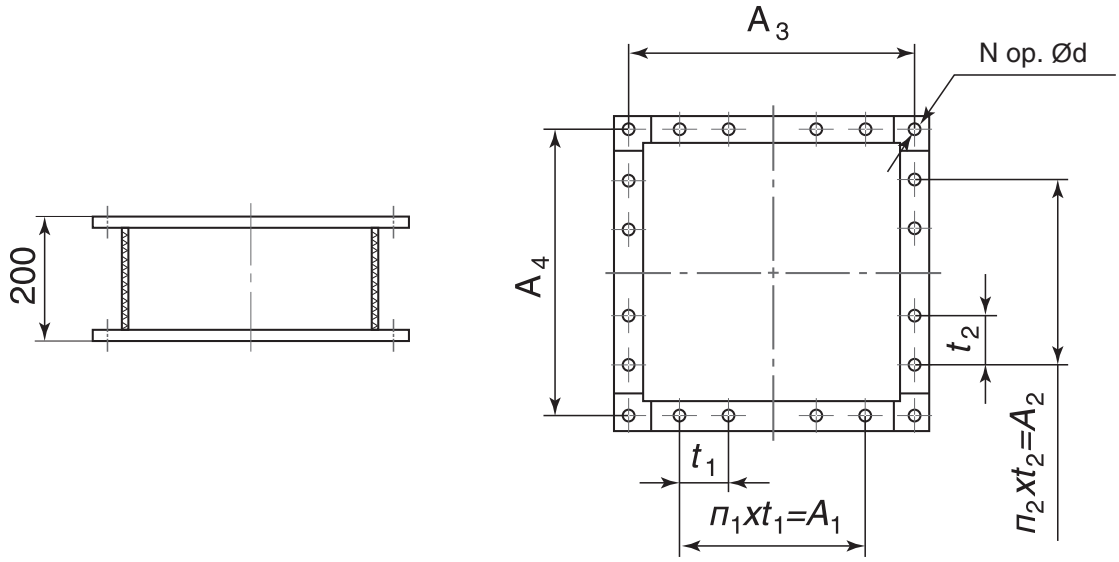

Table 1

Duct No.	A_1, [mm]	A_2, [mm]	A_3, [mm]	A_4, [mm]	n_1, [mm]	n_2, [mm]	t_1, [mm]	t_2, [mm]	d_1, [mm]	N	Fan
175x175	100	100	—	—	1	1	100	100	7	8	BP-2,5
221x221	200	200	—	—	2	2	100	100	7	8	BP-3,15
280x280	200	300	—	—	3	3	100	100	7	16	BP-4
300x300	—	—	370	370	—	—	—	—	7	4	BPKK-2,5
350x350	300	300	—	—	3	3	100	100	7	16	BP-5
400x400	—	—	420	420	—	—	—	—	9	4	BPKK-2,8
447x447	400	400	—	—	4	4	100	100	7	16	BP-6,3
450x450	—	—	470	470	—	—	—	—	9	4	BPKK-3,15
500x500	—	—	520	520	—	—	—	—	9	4	BPKK-3,55
550x550	—	—	580	580	—	—	—	—	9	4	BPKK-4
560x560	600	600	—	—	4	4	150	150	11	16	BP-8
630x630	—	—	650	650	—	—	—	—	9	4	BPKK-4,5
704x704	750	750	—	—	5	5	150	150	12	24	BP-10
710x710	—	—	730	730	—	—	—	—	13	4	BPKK-5
800x800	—	—	830	830	—	—	—	—	13	4	BPKK-5,6
875x875	750	750	—	—	5	5	150	150	12	24	BP-12,5

Note:
1) Square-section flexible ducts are manufactured in general purpose industrial version of all sizes; heat-resistant version is designed for ВР ДУ (VR DU) series fans; acid-proof, corrosion-proof, and frost-resistant versions are designed for ВР (VR) series fans.

Rectangular-Section Flexible Ducts

Table 2

Duct No.	A, [mm]	a, [mm]	П	d, [mm]	B, [mm]	b, [mm]	$П_1$	N	Fan Designation
220x500	530	132,5	4	8	250	125	2	12	ВРП–3,15
245x560	590	147,5	4	8	275	137,5	2	12	ВРП–3,55
275x630	660	132	5	8	305	152,5	2	14	ВРП–4
310x710	740	148	5	8	339	113	3	16	ВРП–4,5
340x800	830	166	5	8	369	123	3	16	ВРП–5
380x900	939	156,5	6	10	417	139	3	18	ВРП–5,6
430x1000	1038	173	6	10	468	156	3	18	ВРП–6,3
500x1125	1162	166	7	10	537	179	3	20	ВРП–7,1
560x1250	1288	184	7	10	597	199	3	20	ВРП–8
300x150	320	—	—	—	170	—	—	4	ВРПП–30x15; ВРПН-1,6
400x200	420	—	—	—	220	—	—	4	ВРПН–1,8; ВРПН–2; ВРПП40x20
500x250	520	—	—	—	270	—	—	4	ВРПН–2,25; ВРПН–2,5; ВРПВ–2; ВРПП50x25
500x300	520	—	—	—	320	—	—	4	ВРПН–2,8; ВРПН–3,15; ВРПВ–2,25; ВРПП50x30
600x300	620	—	—	—	320	—	—	4	ВРПВ–2,5; ВРПП60x30
600x350	620	—	—	—	370	—	—	4	ВРПН–3,55; ВРПВ–2,8; ВРПП60x35
700x400	720	—	—	—	420	—	—	4	ВРПН–4; ВРПВ–3,15; ВРПП70x40
800x500	830	—	—	—	530	—	—	4	ВРПН–4,5; ВРПН–5; ВРПВ–3,55; ВРПП80x50
900x500	930	—	—	—	530	—	—	4	ВРПВ–4
1000x500	1030	—	—	—	530	—	—	4	ВРПН–5,6; ВРПП100x50

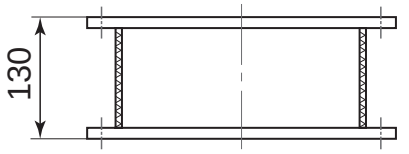

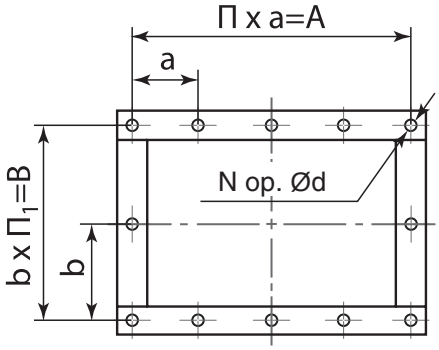

Note:

1) General purpose industrial grade version of rectangular-section flexible ducts is designed for ВРПП (VRPP), ВРПН (VRPN), and ВРПВ (VRPV) fans; heat-resistant version is designed for ВРП (VRP) and ВРПН-Н КХ (VRPN-N KH) fans; acid-proof version is designed for ВРПН-НВК (VRPN-NVK) fans; corrosion-proof version is designed for ВРПН-Н КР (VRPN-N KR) fans.

Nipple Mounted Round-Section Flexible Ducts

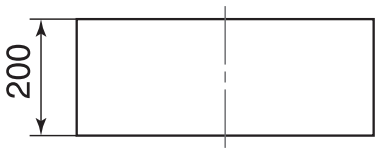

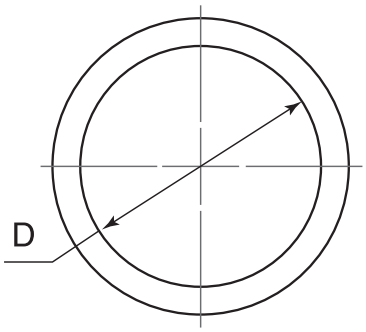

Table 3

Duct No.	D [mm]
250	250
280	280
315	315
355	355
400	400
450	450
500	500
560	560

Note:

Nipple mounted round-section flexible ducts are manufactured in the general purpose industrial grade version.

Round-Section Flexible Ducts

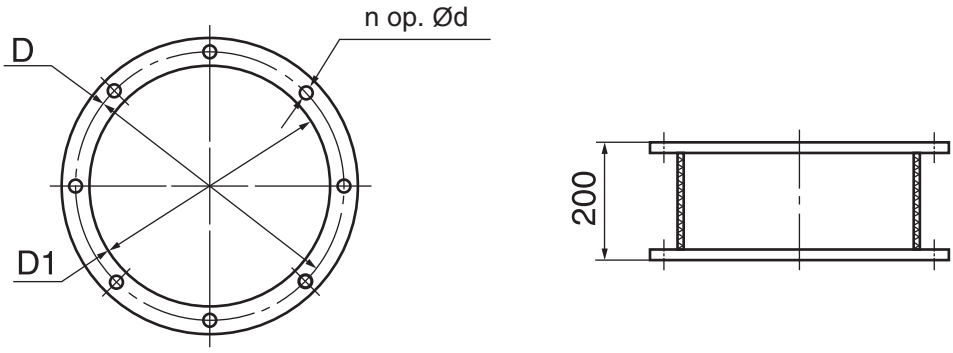

Table 4

Duct No.	D	D1	d	n	Fan
254	274	254	7	8	ВР-2,5ДУ
260	280	260	7	4	ВКРВ-2,5ДУ
290	310	290	7	4	ВКРВ-2,8ДУ
325	345	325	7	4	ВКРН-3,15ДУ; ВКРВ-3,15ДУ; ВР-3,15ДУ; ВРКО-3,15
365	385	365	7	4	ВКРН-3,55ДУ; ВКРВ-3,55ДУ
410	430	410	7	4	ВКРН-4ДУ; ВКРВ-4ДУ; ВР-4ДУ; ВРКО-4
460	480	460	7	6	ВКРН-4,5ДУ; ВКРВ-4,5ДУ; ВРКО-4,5
510	530	510	7	6	ВКРН-5ДУ; ВКРВ-5ДУ; ВО-5ДУ; ВР-5ДУ; ВРКО-5
504	560	504	12	12	УВОП-5
563	620	563	12	12	УВОП-Д-5
570	590	570	10	6	ВКРН-5,6ДУ; ВКРВ-5,6ДУ
640	660	640	10	6	ВКРН-6,3ДУ; ВКРВ-6,3ДУ; ВР-6,3ДУ; ВКРН-7,1ДУ; ВРКО-6,3; ВРКО-7,1
634	690	634	12	16	УВОП-6,3; ВО-6,3ДУ
713	770	713	12	12	УВОП-Д-6,3
720	760	720	10	6	ВКРВ-7,1ДУ
810	850	810	10	6	ВКРН-8ДУ; ВКРВ-8ДУ; ВР-8ДУ; ВРКО-8
806	860	806	12	16	УВОП-8; ВО-8ДУ
904	960	904	12	12	УВОП-Д-8
910	950	910	10	8	ВКРН-9ДУ; ВРКО-9
1015	1040	1015	10	8	ВКРН-10ДУ; ВР-10ДУ; ВРКО-10
1006	1070	1006	12	16	УВОП-10; ВО-10ДУ
1123	1190	1123	12	12	УВОП-Д-10
1135	1165	1135	12	8	ВКРН-11,2ДУ; ВРКО-11,2
1270	1295	1270	12	16	ВКРН-12,5ДУ; ВР-12,5ДУ; ВКРН-14ДУ; ВРКО-12,5; ВРКО-14
1256	1320	1256	12	16	УВОП-12,5; ВО-12,5ДУ
1407	1470	1407	12	12	УВОП-Д-12,5
1620	1675	1620	12	12	ВО-16ДУ

Note:
1) General purpose industrial grade and frost-resistant version of round-section flexible ducts are designed for УВОП (UVOP) series fans; heat-resistant version is designed for ВКРВ (VRKV), ВКРН (VRKN), and ВО (VO) series fans.
2) Round-section flexible ducts for ВР ДУ (VR DU) series fans are manufactured in heat-resistant version; Round-section flexible ducts for ВР (VR) series fans are manufactured in general purpose industrial grade, acid-proof, corrosion-proof, and frost-resistant versions.

Cleaning of Ducted Fan Impellers

Before cleaning, make sure that:

- Supply voltage is cut off
- Switch is blocked
- Fan impeller is at full stop
- Motor and impeller are cold.

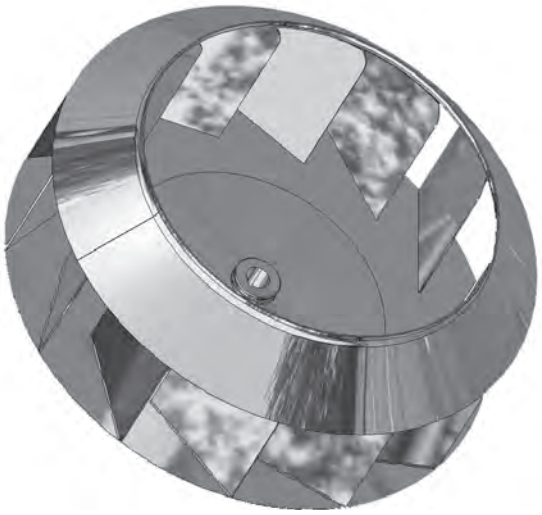

Cleaning of ВРПП (VRPP), ВИП (VIP), ВИПм (VIPm), and ВРКК (VRKK) ducted fan impellers from grease, dust and other contaminants shall be performed using regular household cleaning products except for chemically aggressive substances. Do not use sharp objects and high-pressure devices.

Access to impeller is provided unscrewing bolts fastening fan cover to the housing and removing fan cover (unlock clamps in case of ВИПм (VIPm)).

Access to the impeller of ВРПВ-Н (VRPV-N), ВРПН-Н(НК) (VRPN-N (NK)), and ВРПН-НВК (VRPN-NVK) fans is provided either from air emission side of the fan or by means of removing the cover together with electric motor and impeller mounted on that cover unscrewing fastening bolts.

CALCULATION AND SELECTON SOFTWARE

Software consists of the following parts:

1. Equipment selection program, when the equipment characteristics are defined:
   - Selection of fans (ducted, roof) for the general ventilation system;
   - Selection of smoke exhaust system fans (smoke exhaust fans and air pressurization fans).
2. Equipment selection program using main characteristics and working conditions of equipment:
   - Analysis of complex ventilation sets;
   - Analysis of air curtains;
   - Analysis of attachment heating and ventilation sets.
3. Smoke exhaust and air pressurization systems analysis program.

Fan Selection

Fan selection is performed based on set-up characteristics: air flow rate [m^3/hour] and air drag [Pa]. Selection is performed for normal conditions (air temperature is 20 °C). Smoke exhaust fans may be selected for required handled medium temperature considering medium parameters.

Analysis of Complex AHU (ABC)

Software allows selecting ventilation system components represented by modules with flanged connection. Connecting dimensions are generally accepted for rectangular ducted fans.

Of all available (in data base) heat exchangers (heating) with open flow area provided speed velocity not exceeding set-up value, selection is made for heat exchanger with a property that design air temperature value at the outlet of heat exchanger exceeds set-up value at the least.

Program is used with fan selection software. Fans characteristics and drag curve position are presented based on the set-up operating point. These characteristics are crossed in the point if actual flow rate and actual pressure.

The result of the program execution is a system block diagram with longitudinal and transversal dimensions of joining modules and the whole unit specification.

Analysis of Air Curtains

Software allows performing calculation and selection of warm air curtains based of the following data: average temperature in the jet tip – $t_{см}$ [°C] (according to SNiP 41-01-2003); air heat in curtain heat exchanger – t_3 [°C]; outside air temperature t_H [°C] (according to SNiP 23-41-99*); room air temperature $t_в$ [°C]; wind velocity – v [m/s]; heat-carrying agent parameters for curtain with water-to-air heating; gateway height – H [m]; gateway width – B pm].

The calculation is resulted in air curtain nominal size, axis trajectory and jet limits diagram, and average temperature in the jet tip, which allows estimating air curtain properties and compliance with requirements of regulating documents concerning temperature.

Program allows performing calculation for the curtain without heating.

Analysis of HOBA Pod-Mount Heating and Ventilation Units

Software allows performing calculation and selection of pod-mount heating and ventilation units based on the following reference data: outside air temperature – t [°C] (SNiP 23-01-99*), design inside air temperature, heat-carrying agent parameters, set total capacity.

Software allows performing aggregative calculation of heat loss in a building.

Analysis of Smoke Exhaust System

Software is developed based on Sections 7 and 8 of SNiP 41-01-2003 “Heating, Ventilation, and Air-Conditioning”. The calculation may be performed in accordance with “Recommendations for Smoke Protection in case of Fire“ MDS 41-1.99. Software considers differences in configuration of roof and mail line fans concerning gas emission.

As a result Program defines required smoke exhaust fan parameters: gas temperature before fan, flow rate and required pressure normalized to the reference conditions. Defined parameters allow coming to system selection.

Central air-conditioners selection software "KKTsM-Selection"

KKTsM-Selection is a CMV Manufacturing Works in-house development used for calculation and selection of central modular air conditioners (ККЦМ) with the capacity of 2,500 to 100,000 m^3/hour. (Currently 15 standard versions are produced).

Software is designed for quick and easy selection of a central air-conditioner defining its configuration, dimensions and technical characteristics.

The software allows to calculate facilities with various combinations of sections used in all technological and functional HVAC applications.

Procedure:
1. In the opened window select the type of installation.
2. Fill in the customer and the design data (enter via the head menu).
3. Set installation parameters (enter via the head menu):
   – Design for the purpose intended;
   – Climatic version;
   – Category of location;
   – set installation air handling capacity and its operating side.
4. Select standard size of installation. Recommended air velocity is 3.5 m/sec max.
5. Assemble the installation in accordance with required set of sections.
6. Each unit is calculated automatically when clicking on it. Block parameters required for calculation are set in the dialog mode.
7. Generate the report (use the head menu). A drawing is included into the report automatically.
8. Save the report as ___.pdf (in report window). Close the window.
9. Save the installation selection in the program ___.cco (using head menu).

◆ If by any reason you have not succeed to select equipment using the program, please, contact our specialists and we promptly resolve all issues.

◆ The latest version of software is available to download on the CVM Manufacturing Works website: **www.cvm.ru**

CVM®
www.cvm.ru

AUTOMATIC CONTROL SYSTEMS

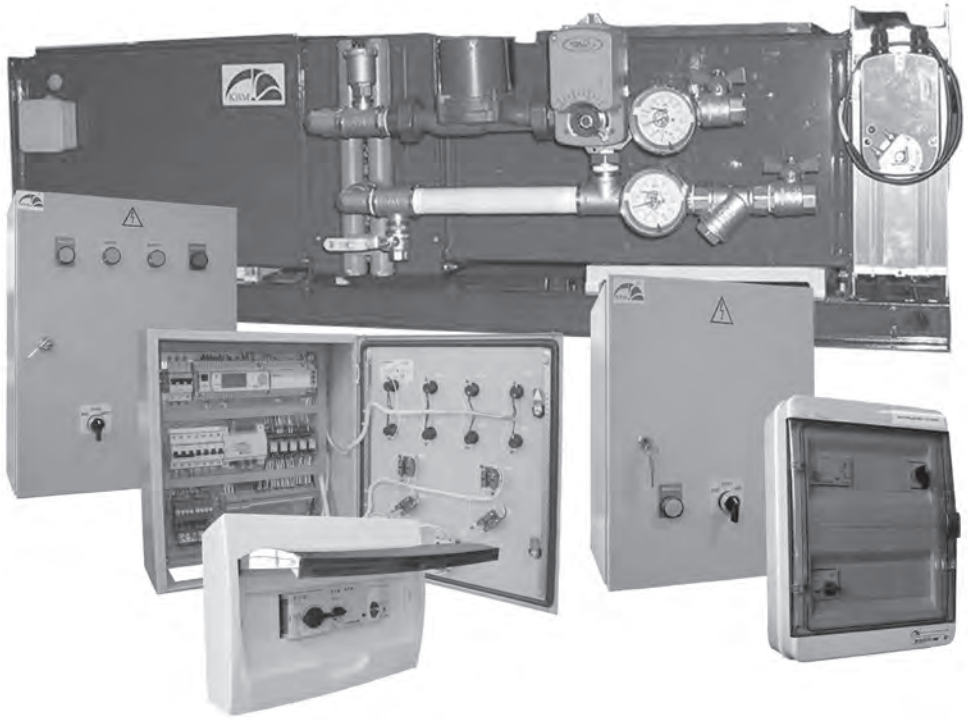

Application

Systems are used for control of ventilation equipment such as air curtains, air handling units, attachment heating sets, etc.

CVM Manufacturing Works reserves the right to change parameters and dimensions of released products as a continuous process of improvement.

General Information

Control systems provide:

- Plant manual start-up from control cabinet or using remote contact;
- Power circuit (fan motor, electric heat exchanger) overloading and short circuit protection;
- Secondary circuits overloading and short circuit protection;
- Independent infeed to power circuits and control circuits;
- Operation and emergency condition alarm;
- Protection against water-to-air heat exchanger (heating) freezing;
- Protection against electric heat exchanger overheating;
- Automatic restart after heat exchanger protection actuation, unless otherwise specified;
- For ABC (AVS) and CBAH (SVAN) units – Heating power adjustment: smooth (water-to-air or electric heat exchanger) or stepwise (electric heat exchanger);
- Active protection against freezing and improved control characteristic using hydraulic piping scheme together with circulation pump installation and mixing with return water (water-to-air heat exchanger) for ABC (AVS) and CBAH (SVAN).

Control systems include:

- Control cabinets;
- Gauges;
- Actuators.

A standard cabinet housing has IP40 protection class rating. IP54 or other option is available upon special request. Overall dimensions of cabinets depend on generating capacity and control system type.

For Air Curtains (ШАУЗ (ShAUZ)) and Power Cabinets (ШС (ShS)):

Cabinet Overall Dimensions (WxHxD)	Cabinet Switching power
340 x 420 x 155	ШАУЗ (ShAUZ) up to 2 x 11 kW, ШС (ShS) up to 45 kW
400 x 600 x 155	ШАУЗ (ShAUZ) up to 2 x 22 kW, ШС (ShS) up to 90 kW

For Standard ABC (AVS) and CBAH (SVAN) Sets (ШАУП (ShAUP)):

Cabinet Overall Dimensions (WxHxD)	Cabinet Switching power
400 x 505 x 155	up to 22 kW

Control cabinets are wall-mountable.

Power equipment (fan, electric motor, and pump) shall be connected with ВВГ (VVG), ПВС (PVS) or other wire with the same cross-section and power.

Heat regulators and gauges shall be connected with МКШ (MKSh), КВВГ (KVVG) or ПВС (PVS) wire with cross-section 0.75 mm^2 (3x0.75). Temperature gauges upon high levels of leakage or interference shall be connected with shielded cable.

Actuators (adjusting valve drive, air gate drive) shall be connected with МКШ (MKSh), КВВГ (KVVG), ПВС (PVS) or identical wire with cross-section 0.75 mm^2 (3x0.75).

Designation

System is designed for fan regulation (see pp.7-71). System has only essential functionality, which makes it multipurpose.

Main Characteristics

System is comprised of the following components:

- ◆ Automation and control cabinet ШУВ (ShUV);
- ◆ Remote control panel (optional);
- ◆ Room thermostat (optional);
- ◆ Gas analyzer (optional).

ShUV provides control of the fan motor and air throttle drive, as well as motor and automation circuitry protection against overload and short-circuit, along with indication of operation mode and alarms.

Functionality

Control system provides the following standard functionality:
- ◆ Manual startup and shut down of fan using ШУВ (ShUV);
- ◆ Remote startup and shut down using external terminal;
- ◆ Fan motor control and protection (3 phases, ~380V or single-phase ~220V);
- ◆ Fan operation monitoring (closing contact by default);
- ◆ Fire alarm actuated shut down (closing contact by default).

Optionally available:
- ◆ Mounting of several ShUV as a single unit;
- ◆ Fan rotation speed control;
- ◆ Operation with automatic switching to a standby fan (ШУВ-РВ (ShUV-RV) – see p.192).

Connection Diagram

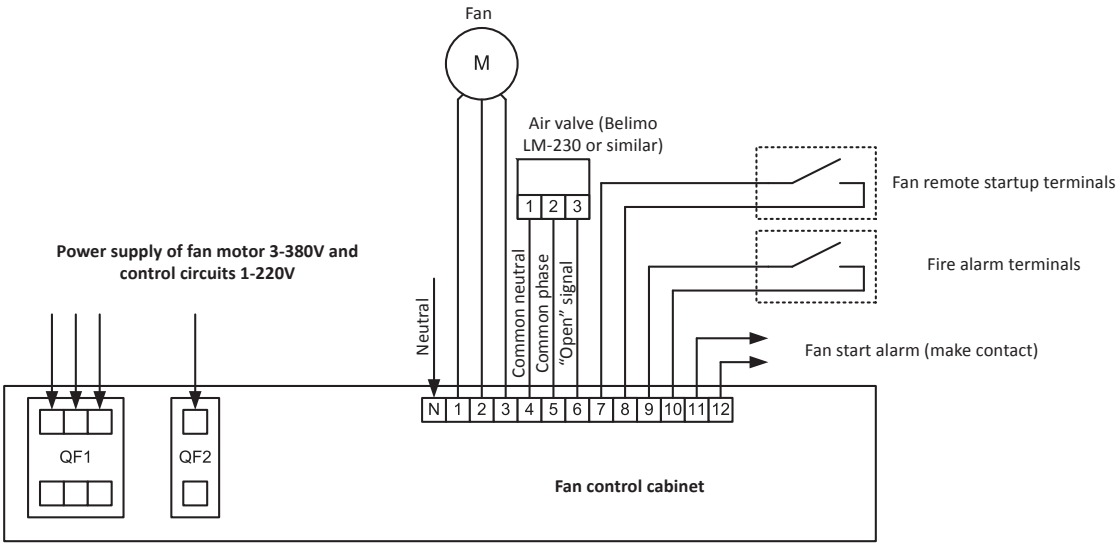

Example of reference designation:
ШУВ-380-1-5,5-1P40 ТУ 3430-023-64600223-2011, where:
ШУВ – Fan control cabinet;
380 – Power supply voltage is 380V;
1 – Single operated device (single fan);
5,5 – Fan power is 5.5kW;
IP40 – Protection against small solid objects;
ТУ – Designation of specification.

ШУВ-380-7-7×5,5-IP40 ТУ 3430-023-64600223-2011, where:
ШУВ – Fan control cabinet;
380 – Power supply voltage is 380V;
7 – Seven operated devices (seven fans);
7×5,5 – Power of each fan is 5.5kW;
IP40 – Protection against small solid objects;
ТУ – Designation of specification.

Designation

System is designed for low power fan regulation (see pp.7-71). System has only essential functionality, which makes it multipurpose.

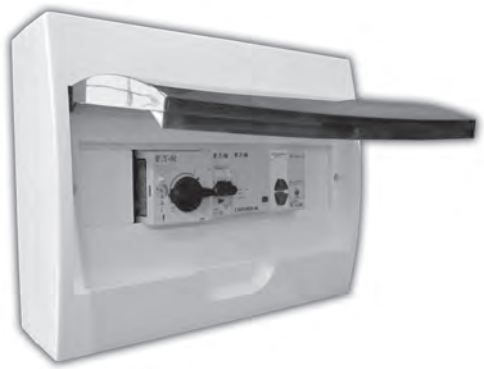

Main Characteristics

System is comprised of the following components:
- ◆ Automation and control cabinet ШУВ-Мод (ShUV-Mod);
- ◆ Remote control panel (optional);
- ◆ Room thermostat (optional).

ШУВ-Мод (ShUV-Mod) provides control of the fan motor and air throttle drive, as well as motor and automation circuitry protection against overload and short-circuit, along with indication of operation mode and alarms.

Casing material: impact-resistant self-extinguishing ABS plastic.
Dimensions: 255×200×95 mm.
Weight, max: 1.7kg.

Functionality

Control system provides the following standard functionality:
- ◆ Manual startup and shut down of fan using ШУВ-Мод (ShUV-Mod);
- ◆ Remote startup and shut down using external terminal;
- ◆ Fan motor control and protection (single-phase, ~220V 0.25...4.0 kW or 3-phase ~380V 0.25...7.5 kW);
- ◆ Fire alarm actuated shut down (closing contact by default).

Connection Diagrams

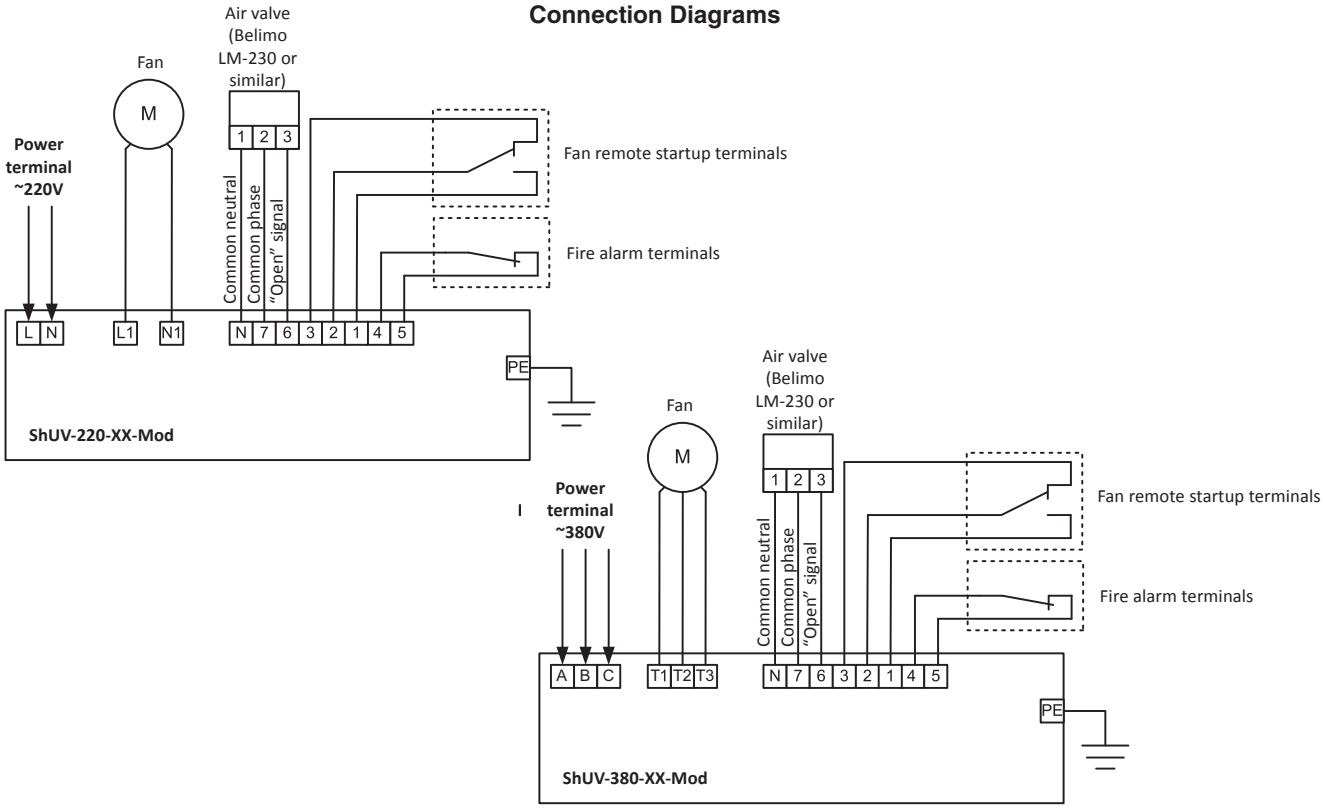

Example of reference designation:

ШУВ-Мод-220-1-1,5-1P40 ТУ 3430-023-64600223-2011, where:
ШУВ – Fan control cabinet;
Мод – in a plastic modular casing;
220 – Power supply voltage is 220V;
1 – Single operated device (single fan);
1,5 – Fan power is 1.5kW;
IP40 – Protection against small solid objects;
ТУ – Designation of specification.

ШУВ-Мод-380-1-4,0-P55 ТУ 3430-023-64600223-2011, where:
ШУВ – Fan control cabinet;
Мод – in a plastic modular casing;
380 – Power supply voltage is 380V;
1 – Single operated device (single fan);
4,0 – Fan power is 4.0kW;
IP55 – Protection against dust limited ingress and water jets;
ТУ – Designation of specification.

Designation

System is designed for heavy-duty fan regulation (see pp.7-71). System has only essential functionality, which makes it multipurpose.

Main Characteristics

System is comprised of the following components:

- ◆ Automation and control cabinet ШУВ-2 с (ShUV-2s);
- ◆ Remote control panel (optional);
- ◆ Room thermostat (optional);
- ◆ Gas analyzer (optional).

ШУВ (ShUV) provides control of the fan motor and air throttle drive, as well as motor and automation circuitry protection against overload and short-circuit, along with indication of operation mode and alarms.

Functionality

Control system provides the following standard functionality:

- ◆ Manual startup and shut down of fan using ШУВ-2 с (ShUV-2s);
- ◆ Remote startup and shut down using external terminal;
- ◆ Reduction of the fan motor inrush current using wye-delta reconnection;
- ◆ Fan motor control and protection (3-phase ~380V);
- ◆ Fan operation monitoring (closing contact by default);
- ◆ Fire alarm actuated shut down (closing contact by default).

Optionally available:

- ◆ Operation with automatic switching to a standby fan.

Connection Diagram

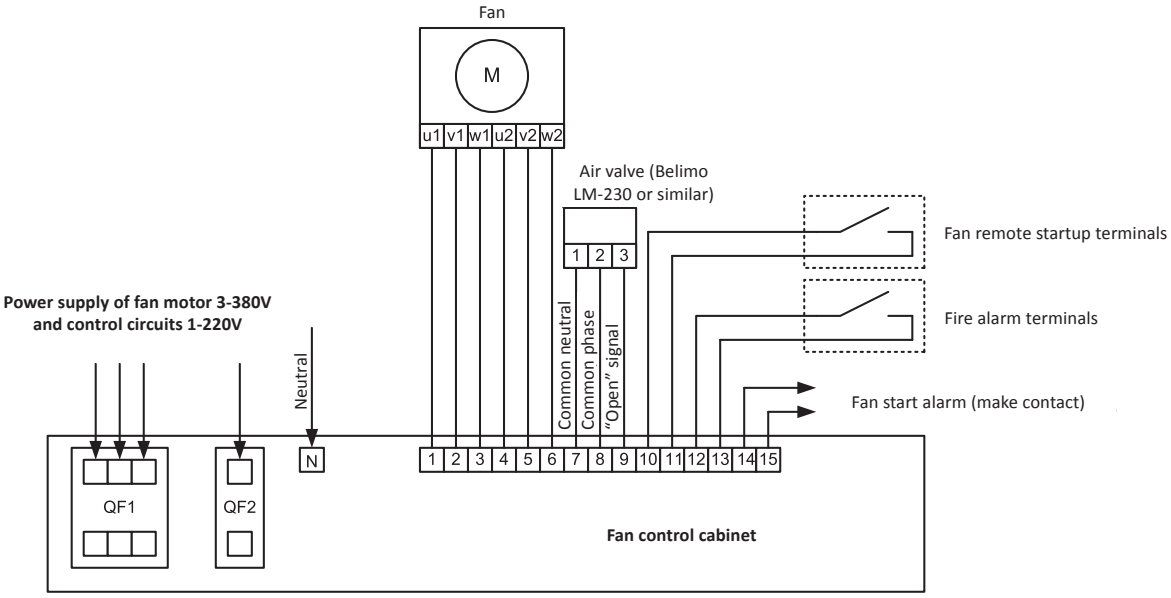

Example of reference designation:
ШУВ-2 с-380-1-30-Р40 ТУ 3430-023-64600223-2011, where:
ШУВ – Fan control cabinet;
2 с – Dual-speed (why-delta reconnection);
380 – Power supply voltage is 380V;
1 – Single operated device (single fan);
30 – Fan power is 30kW;
IP40 – Protection against small solid objects;
ТУ – Designation of specification.

Application

The system is designed for controlling water heated air handling units.

Main Characteristics

The control system includes the following components:

- Control cabinet ШАУП-В (ShAUP-V);
- Adjusting valve with electric drive for heating water;
- Adjusting valve for heat-absorbing medium;
- Circulation pump;
- Air temperature sensor;
- Return water temperature regulator;
- Capillary temperature regulator.

ШАУП-В (ShAUP-V) provides control of air shutter drive, fan motor, adjusting valve, and circulation pump, as well as control circuits and fan motor circuits overloading and short circuit protection, and circulation pump short circuit protection.

Heating power control method consists in alteration of heating water flow rate changing the position of adjusting valve.

Functions

A standard control system provides the following functions:

- Air handling unit manual start-up and shut-down from ШАУП-В (ShAUP-V);
- Remote start-up and shut-down using external contact;
- Freezing protection;
- Operation without heating and freezing protection (summer mode);
- Control of adjusting valve drive for heating water (-220V);
- Control of adjusting valve drive for heat-absorbing medium;
- PI/PID power adjustment of water-to-air heat exchanger (heating);
- Air shutter drive control (- 220V)
- Fan motor control and protection (3 phases, -380V);
- Circulation pump control and protection (-220V);
- Shutting down on a signal from fire alarm system (closing contact by default).

The following functions are optionally available:

- Filter condition monitoring with dustiness indication by lamp on the front panel;
- Operation with automatic switching to the stand-by fan;
- Exhaust fan operation control;
- Fan (inclusive of exhaust fans) speed control both manually and on a signal from pressure transducer or air flow rate in characteristic point transducer.

Water heated air handling unit control system wiring diagram

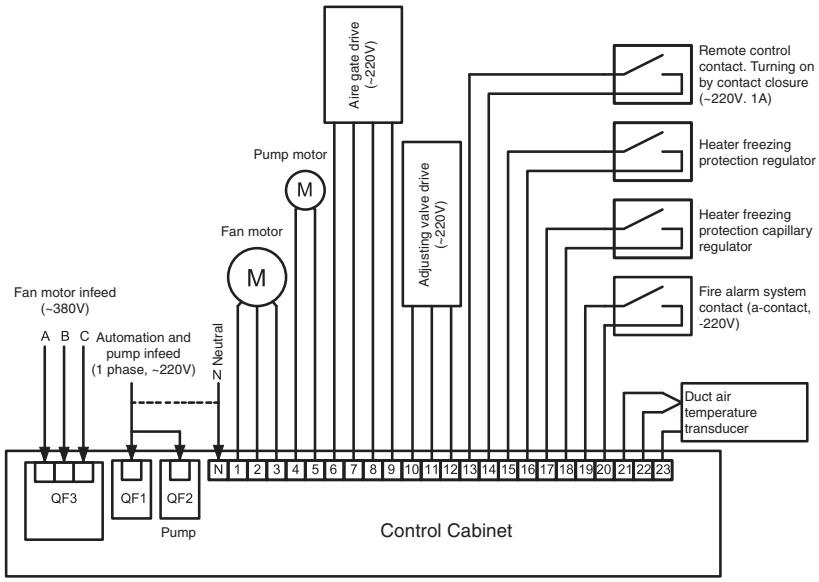

Example of reference designation:
ШАУП-В-Ф-380-1-2,2-IP40 ТУ 3430-023-64600223-2011, where:
ШАУП – Air Handling Unit Automatic Control Cabinet;
В – Water-heated air;
Ф – Filter clogging control;
380 – Power supply voltage is 380V;
1 – Single operated device (single fan);
2,2 – Fan power is 2.2kW;
IP40 – Protection against small solid objects;
ТУ – Designation of specification.

ШАУП-В-АВР-Ф-РВ-380-2-2x4,0-IP54 ТУ 3430-023-64600223-2011, where:
ШАУП – Air Handling Unit Automatic Control Cabinet;
В – Water-heated air;
АВР – Automatic circuit-breaker;
Ф – Filter clogging control;
РВ – Switching to standby fan;
380 – Power supply voltage is 380V;
2 – Two operated devices (two fans);
2x4,0 – Power of each fan is 4.0kW;
IP54 – Protection against dust limited ingress and water sprayed from all directions;
ТУ – Designation of specification.

Hydraulic Piping Scheme for Air Handling Unit Heat Exchanger

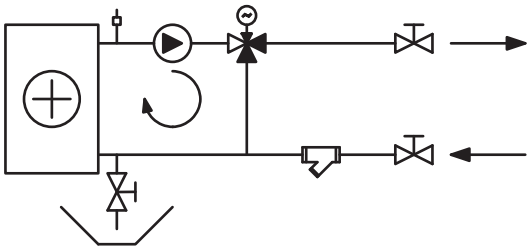

Scheme 1.

If heat exchanger selection is correct, then this piping scheme provides return water temperature not exceeding the value set up in operating mode. Practically constant water flow rate through the heat exchanger is also provided. Power adjustment is performed by means of alternating of heat-carrying medium temperature at the heat exchanger inlet. Optionally mixing line may be equipped with additional return valve for the purpose of piping survival in case of the pump breakdown. Piping elements: pump and adjusting valve are selected for operation within the scope of the present scheme.

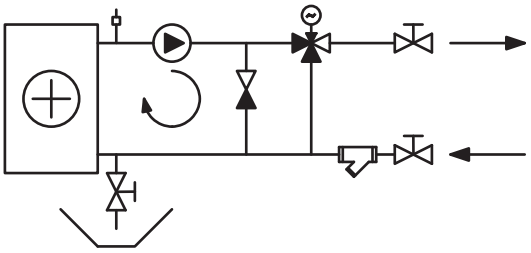

Scheme 2.

This piping scheme provides constant supply water (direct and return) flow rate. This scheme may be implemented in the systems required constant hydraulic parameters concerning supply water, but free from limitations regarding return water temperature exceeding as a consequence.

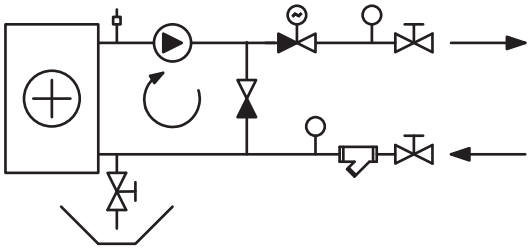

Scheme 3.

In this case adjusting is performed using two-way valve.

Application

The system is designed for controlling air handling units with electric heat exchanger power stepwise regulation

Main Characteristics

The control system includes the following components:

- Control cabinet ШАУП-Э-3СТ (ShAUP-E-3ST);
- Power cabinet ШС-3СТ (ShS-3ST);
- Outside air temperature regulator;
- Room air temperature regulator or duct air temperature regulator.

ШАУП-Э-3СТ (ShAUP-E-3ST) provides control of air shutter drive and fan motor, control of 3 stages of electric heat exchanger power by means of ШС-3СТ (ShS-3ST), control circuits and fan motor circuits overloading and short circuit protection, and electric heat exchanger short circuit protection.

ШС-3СТ (ShS-3ST) provides commutation and electric heat exchanger protection against overloading and short circuit.

Heating power control method consists in turning on and off of electric heat exchanger control stage.

Functions

A standard control system provides the following functions:

- Air handling unit manual start-up and shut-down с ШАУП-Э-3СТ (ShAUP-E-3ST);
- Remote start-up and shut-down using external contact;
- Operation without heating (Summer mode);
- Air shutter drive control (-220V);
- Fan motor control and protection (3 phases, -380V);
- 3 stage control of electric heat exchanger power;
- Electric heat exchanger control and protection;
- Electric heat exchanger protection against overheating;
- Shutting down on a signal from fire alarm system (closing contact by default).

The following functions are optionally available:

- Filter condition monitoring with dustiness indication by lamp on the front panel;
- Operation with automatic switching to the stand-by fan;
- Exhaust fan operation control;
- Fan (inclusive of exhaust fans) speed control both manually and on a signal from pressure transducer or air flow rate in characteristic point transducer.

Wiring diagram of air handling units control system with electric heat exchanger power stepwise regulation

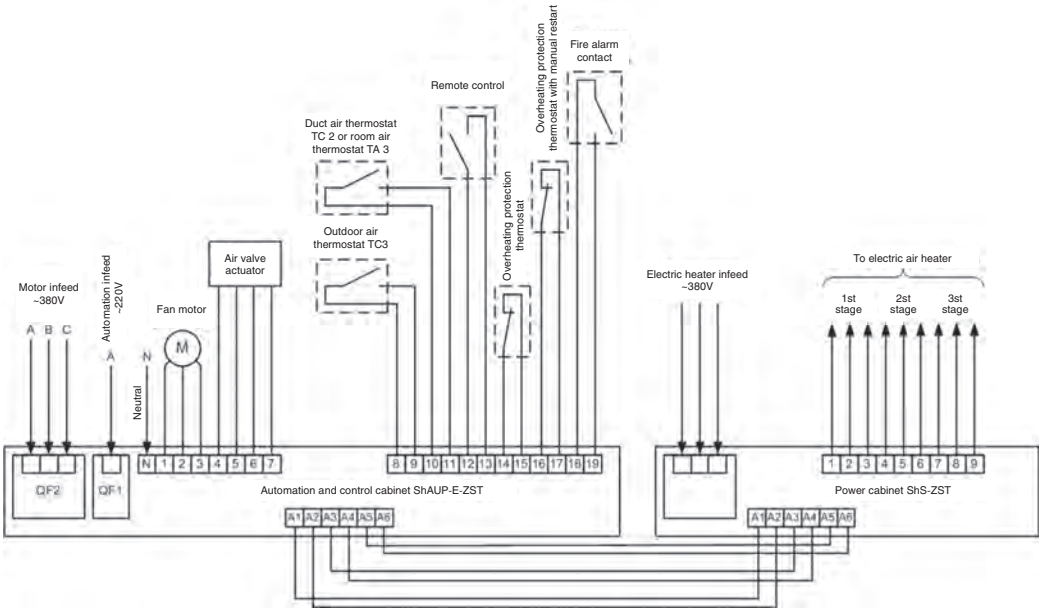

Example of reference designation:

ШАУП-Э-3СТ-Ф-380-1-7,5-IP40 ТУ 3430-023-64600223-2011, where:
ШАУП – Air Handling Unit Automatic Control Cabinet;
Э-3СТ – Three-stage electric air heating;
Ф – Filter clogging control;
380 – Power supply voltage is 380V;
1 – Single operated device (single fan);
7,5 – Fan power is 7.5kW;
IP40 – Protection against small solid objects;
ТУ – Designation of specification.

ШС-Э-3СТ-380-32-IP40 ТУ 3430-023-64600223-2011, where:
ШС – Power cubicle;
Э-3СТ – Three-stage electric air heating;
380 – Power supply voltage is 380V;
32 – Heating power is 32kW;
IP40 – Protection against small solid objects;
ТУ – Designation of specification.

Application

The system is designed for controlling air handling units with electric heat exchanger power smooth regulation.

Main Characteristics

The control system includes the following components:

- Control cabinet ШАУП-Э-С (ShAUP-E-S);
- Power cabinet ШСС (ShSS);
- Air temperature sensors.

ШАУП-Э-С (ShAUP-E-S) provides control of air shutter drive and fan motor, electric heat exchanger power smooth control by means of ШСС (ShSS), control circuits and fan motor circuits overloading and short circuit protection, electric heat exchanger protection against overheating.

ШСС (ShSS) provides commutation and electric heat exchanger protection against overloading and short circuit. ShSS shall be mounted without deepening providing free air flow for cooling of walls and radiator.

In general system is capable of providing control and maintaining of set-up air temperature in air duct within the accuracy of 0.5°C. Heating power control method consists in turning on and off of electric heat exchanger at the moment of supply phase zero crossing, i.e. with minimal interference in the grid. Commutation is performed with set frequency and variable duration on regulator signals providing smoothness and accuracy of adjustment.

Functions

A standard control system provides the following functions:

- Air handling unit manual start-up and shut-down с ШАУП-Э-С (ShAUP-E-S);
- Remote start-up and shut-down using external contact;
- Operation without heating (Summer mode);
- Air shutter drive control (-220V);
- Fan motor control and protection (3 phases, -380V);
- PID power adjustment of electric heat exchanger;
- Electric heat exchanger control and protection;
- Electric heat exchanger protection against overheating;
- Shutting down on a signal from fire alarm system (closing contact by default).

The following functions are optionally available:

- Filter condition monitoring with dustiness indication by lamp on the front panel;
- Operation with automatic switching to the stand-by fan;
- Exhaust fan operation control;
- Fan (inclusive of exhaust fans) speed control both manually and on a signal from pressure transducer or air flow rate in characteristic point transducer.

Wiring diagram of air handling units control system with electric heat exchanger power smooth regulation

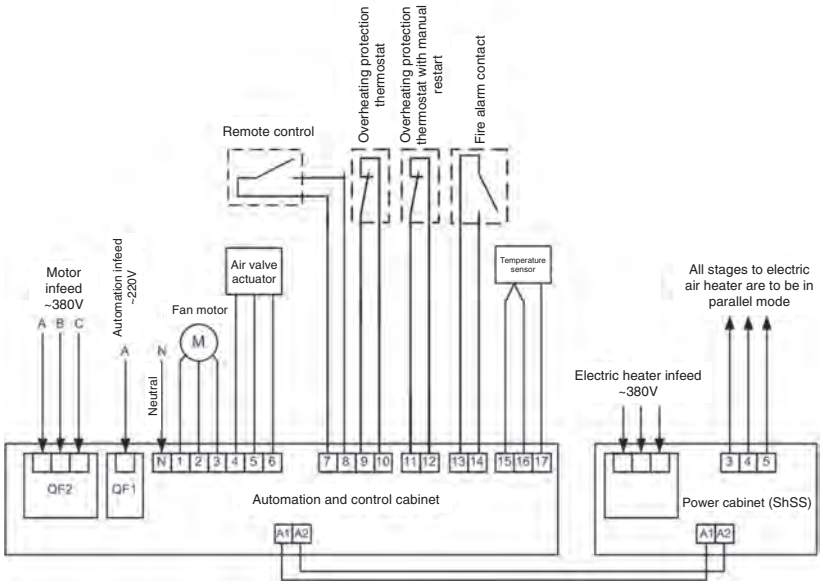

Example of reference designation:

ШАУП-Э-С-Ф-380-1-7,5-IP40 ТУ 3430-023-64600223-2011, where:
ШАУП – Air Handling Unit Automatic Control Cabinet;
Э – Electric air heating;
С – Triac (with smooth adjustment of temperature);
Ф – Filter clogging control;
380 – Power supply voltage is 380V;
1 – Single operated device (single fan);
7,5 – Fan power is 7.5kW;
IP40 – Protection against small solid objects;
ТУ – Designation of specification.

ШС-С-380-23-IP40 ТУ 3430-023-64600223-2011, where:
ШС – Power cubicle;
С – Triac (with solid-state relay);
380 – Power supply voltage is 380V;
23 – Heating power is 23kW;
IP40 – Protection against small solid objects;
ТУ – Designation of specification

Designation

System is designed for air handling units and central conditioners control (see p.84).

Functionality

Control system provides the following standard functionality:

- Manual startup and shut down of fan using ШАУК (ShAUK);
- Automatic startup and shut down in response to a signal from controller;
- Fan motor control and protection (3 phases, ~380V or single-phase ~220V);
- Fan motor control in response to the pressure drop;
- Control of air throttles on suction and exhaust fans;
- Daily schedule with night-time ventilation;
- Weekly schedule considering holidays and special days;
- Energy saving due to consideration for environment conditions, schedule, presence of people in a room, etc.;
- System operation monitoring via KNX protocol (RS-232, Ethernet, and USB interfaces are optional);
- Filter clogging indication;
- Fire alarm actuated shut down (closing contact by default);
- Alarm processing, dispatching, and storing in the alarm log.

Depending on configuration:

- Maintaining of air temperature in a room by means of water, freon, or electric-type unit heaters control;
- Maintaining air humidity in a room by means of humidifier or steam-generator unit control;
- Limitation of maximum and minimum levels of temperature and humidity of inlet air;
- Control of mixing air dampers for the purpose of air recirculation;
- Air heat-exchanger control;
- Manual startup and shut down of circulating pumps using ШАУК (ShAUK);
- Manual heating of water-type unit heater.

Depending on configuration system provides the following protection:

- Short-circuit protection of equipment;
- Protection against phase interruption, phase adjacency, phase sequence violation;
- Fan motor overcurrent protection;
- Water-type unit heater protection against freezing;
- Electric unit heater protection against overheating and ignition;
- Circulating pump protection against dry running;
- Ice protection of heat-exchangers.

Optionally available:

- Remote PLC control panel;
- Ethernet connectivity;
- Fan rotation speed control;
- Forced ventilation actuated by room air quality sensor;
- Operation with automatic switching to a standby fan.

A few diagrams illustrating ShAUK-series cabinets application selected from the vast variety of possible combinations of HVAC system functional units are shown below.

Diagram No.6в

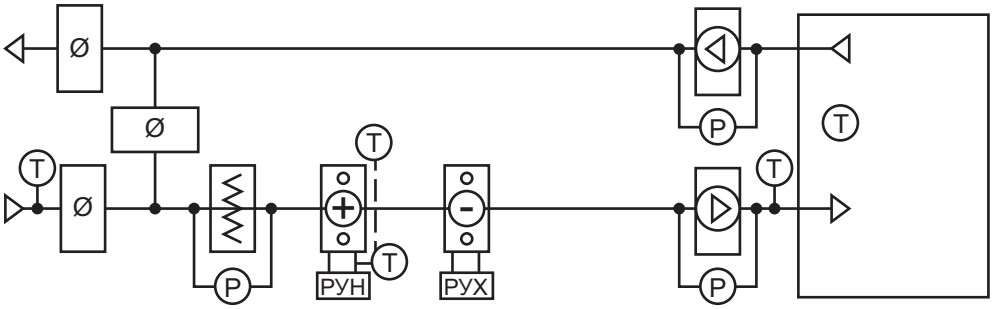

Designation

System is designed for control of air handling units and central conditioners with air heating and cooling by water-type heat-exchangers.

Functionality

- Suction and exhaust fans control;
- Manual startup and shut down of fan using ШАУК (ShAUK);
- Automatic fan startup and shut down in response to a signal from controller;
- Maintaining inlet air temperature by means of heater and cooler control units regulation;
- Filter clogging indication;
- Active freezing protection.

Optionally:

- Mixing damper control actuated by air quality sensor;
- Fan rotation speed adjustment for the purpose of maintaining the constant pressure in ductwork or air flow rate.

Composition

System is comprised of the following components:

- ШАУК-Ф-В20-В30 (ShAUK-F-V20-V30) cabinet;
- Control unit РУН (RUN);
- Control unit РУЗ (RUZ);
- Room temperature sensor;
- x2 Duct temperature sensor;
- Room air quality sensor (optional);
- Capillary freezing protection thermostat;
- Portable freezing protection thermostat;
- Filter differential pressure switch;
- Fan differential pressure switch.

Note: in case of multi-room operation temperature may be controlled only in reference room or in exhaust duct. In the latter case room air temperature shall be replaced with another duct sensor during configuring the system make-up.

Designation

Example of control cabinet type designation used in order and technical documentation:
ШАУК-Ф-В20-В30-380-15+15-1Р66 ТУ 3430-023-64600223-2011, where:
ШАУК (ShAUK) – Central air-conditioner automatic control cabinet;
Ф – Built-in filter clogging control function;
В20 – Water-type air heater;
В30 – Water-type air cooler;
380 – Power supply voltage is 380V;
15 – Suction fan power is 15kW;
15 – Exhaust fan power is 15kW;
IP66 – Enclosure protection against dust ingress and strong jets of water;
ТУ – Designation of specification.

Diagram No.9в

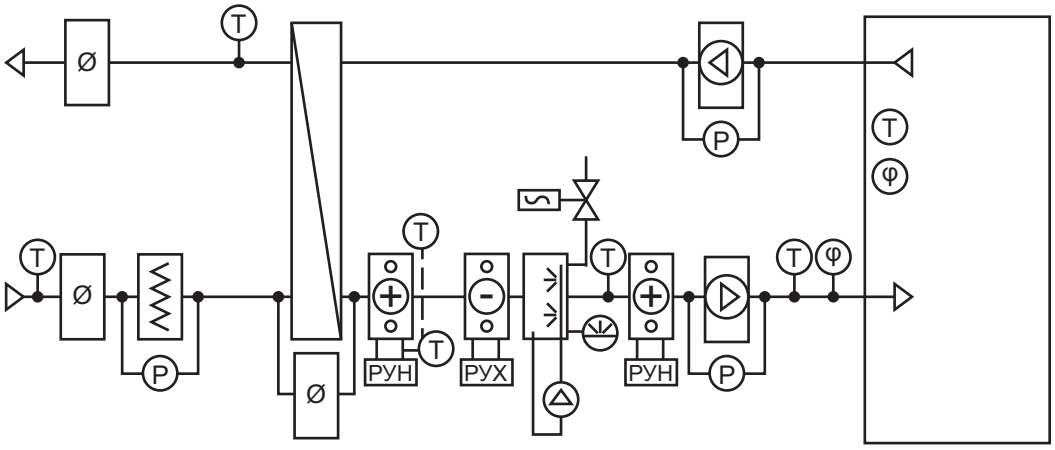

Designation

System is designed for control of air handling units and central air-conditioners with heat recovery in plate recuperator, air heating and cooling by water-type heat-exchangers, and air humidification in air washer.

Functionality

- Suction and exhaust fans control;
- Manual startup and shut down of fan using ШАУК (ShAUK);
- Automatic fan startup and shut down in response to a signal from controller;
- Maintaining inlet air temperature by means of heater and cooler control units regulation;
- Dew point sequential regulation by means of heater and cooler control units regulation;
- Maintaining air humidity in a room by means of humidifier control;
- Control of room air dehumidification by means of shifting the dew point;
- Filter clogging indication;
- Active freezing protection;
- Ice protection of heat-exchangers;
- Maintaining the water level in humidifier.

Optionally:

- Fan rotation speed adjustment for the purpose of maintaining the constant pressure in ductwork or air flow rate.

Composition

System is comprised of the following components:

- ШАУК-Ф-Р75-В20-В30-У40-В20 (ShAUK-F-R75-V20-V30-U40-V20) cabinet;
- x2 Control unit РУН (RUN);
- Control unit РУЗ (RUZ);
- Circulating pump (for air washer);
- Solenoid valve;
- Room temperature and humidity sensor;
- Duct temperature and humidity sensor;
- x3 Duct temperature sensor;
- Capillary freezing protection thermostat;
- Portable freezing protection thermostat;
- Flow switch;
- x2 Fluid level sensor;
- Filter differential pressure switch;
- x2 Fan differential pressure switch.

Note: in case of multi-room operation temperature may be controlled only in reference room or in exhaust duct. In the latter case room air temperature shall be replaced with another duct sensor during configuring the system make-up.

Designation

Example of control cabinet type designation used in order and technical documentation:
ШАУК-Ф-Р75-В20-В30-У40-В20-380-11+11-1Р66 ТУ 3430-023-64600223-2011, where:
ШАУК (ShAUK) – Central air-conditioner automatic control cabinet;
Ф – Built-in filter clogging control function;
Р75 – Plate recuperator;
В20 – Water-type air heater (1st stage heating);
В30 – Water-type air cooler;
У40 – Watering humidifier;
В20 – Water-type air heater (2nd stage heating);
380 – Supply voltage – 380 V;
11 – Suction fan power is 11kW;
11 – Exhaust fan power is 11kW;
IP66 – Enclosure protection against dust ingress and strong jets of water;
ТУ – Designation of specification.

CVM Manufacturing Works produces control cabinets based on controllers by third-party domestic and foreign manufacturers with various sets of service functions.

Standby fan operation control

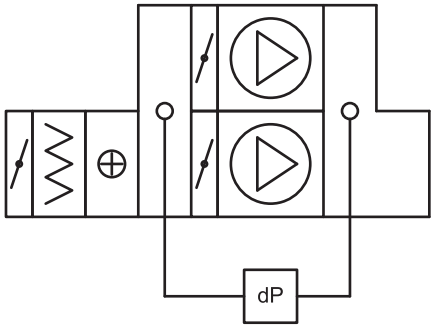

Components:
- ◆ ШАУП-РВ (ShAUP-RV) or ШУВ-РВ (ShUV-RV) control cabinet;
- ◆ Fan differential pressure switch.

System provides functioning of fans (main and standby) and corresponding air throttles.

Front panel contains main fan selection switch (B1-0-B2), fan operation lamps, “Alarm” and “Standby” lamps.

Description of operation

One of the fans (selected by switch) is started up in response to ШАУП (ShAUP) cabinet signal followed by opening of corresponding air throttle. If pressure drop cannot reach set value during specified time delay (set using timer in the cabinet), then system automatically switches to the second fan followed by “Standby” lamp lighting up. During fan running (not in the startup mode) switching initiated by pressure drop is performed without time delay. Switching back to the main fan is performed after system restart only.

Connection Diagram

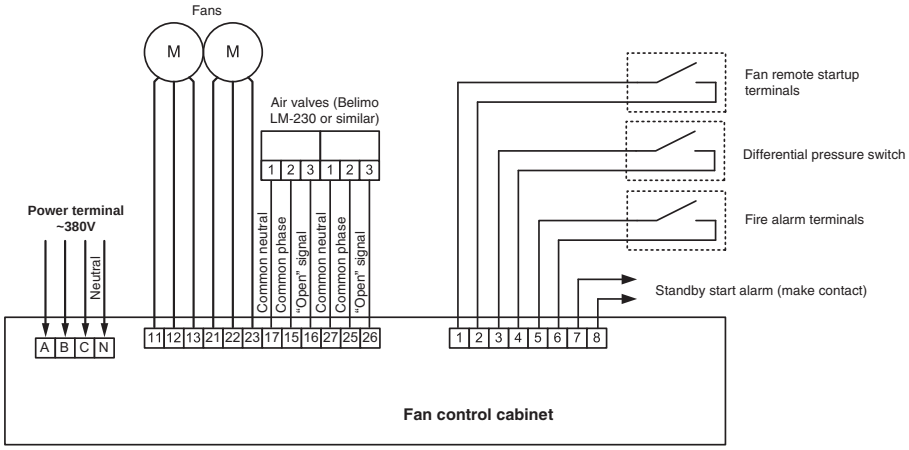

Example of reference designation:
ШУВ-Ф-РВ-380-2-2×3,0-Р54 ТУ 3430-023-64600223-2011, where:
ШУВ – Fan control cabinet;
Ф – Filter clogging control;
РВ – Switching to the standby fan;
380 – Power supply voltage is 380V;
2 – Two operated devices (two fans);
2×3,0 – Power of each fan is 3.0kW;
IP54 – Protection against dust limited ingress and water sprayed from all directions;
ТУ – Designation of specification.

Exhaust Fan Control

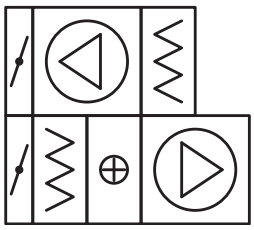

Depending on fan power (or on request), system arrangement is available either in a single case (ShAUP cabinet) or in additional case (ShUV cabinet). Control provides simultaneous on/off of suction and exhaust fans, as well as opening/closing of inlet and outlet air throttles. Air handling unit shut down is performed upon actuation of thermal protection of any fan.

Fan Rotation Speed Control

Fan rotation speed is regulated by means of frequency converter or transformer regulator.

Application

The system is designed for pod-mount heating and ventilation unit NOVA control.

Main Characteristics

The control system includes the following components:

- Control cabinet ШАУН -В (ShAUN-V);
- Power cabinet;
- Room temperature regulator.

ШАУН-В (ShAUN-V) provides control of fan motor and adjusting valve in relation to the heating water, as well as control circuits and fan motor circuits overloading and short circuit protection.

Heating power control method consists in alteration of heating water flow rate changing the position of adjusting valve.

Functions

A standard control system provides the following functions:

- Manual start-up and turning on of ШАУН-В (ShAUN-V) heating unit;
- Remote start-up and shut-down using external contact;
- Control of adjusting valve drive for heating water (~200V);
- PI/PID power adjustment of water-to-air heat exchanger (heating);
- Fan motor control and protection (3 phases, ~380V);
- Shutting down on a signal from fire alarm system (closing contact by default).

HOBA (NOVA) heating units control cabinet wiring diagram

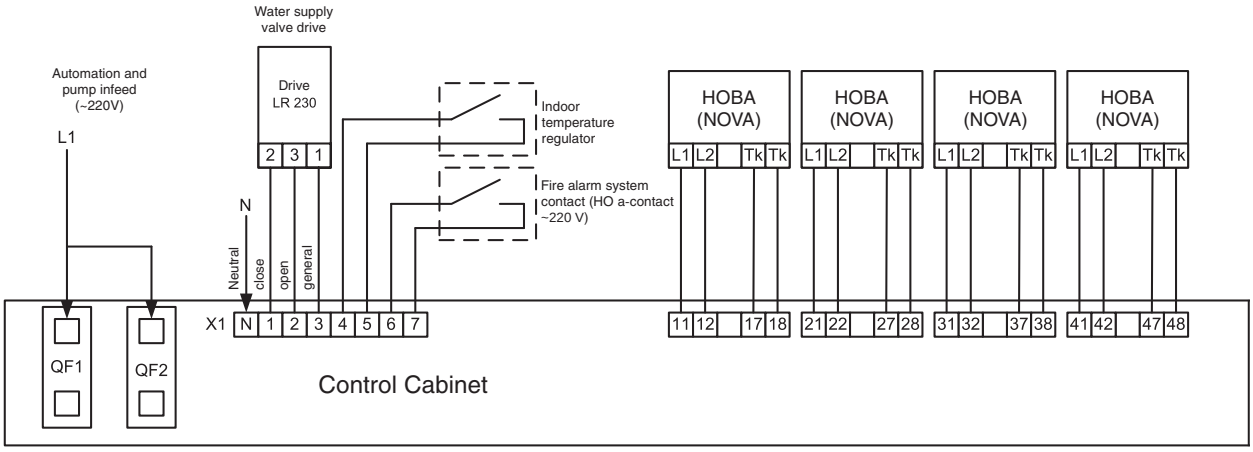

Example of reference designation:

ШАУН-В-220-4-4x0,11-IP40 ТУ 3430-023-64600223-2011, where:
ШАУН – Heating Unit Automatic Control Cabinet;
В – Water-heated air;
220 – Power supply voltage is 220V;
4 – Four operated devices (four heating units);
4x0,11 – Fan power is 0.11kW per unit;
IP40 – Protection against small solid objects;
ТУ – Designation of specification.

ШАУН-В-380-6-6x0,25-IP40 ТУ 3430-023-64600223-2011, where:
ШАУН – Heating Unit Automatic Control Cabinet;
В – Water-heated air;
380 – Power supply voltage is 380V;
6 – Six operated devices (six heating units);
6x0,25 – Fan power is 0.25kW per unit;
IP40 – Protection against small solid objects;
ТУ – Designation of specification.

Designation

System is designed for dry cooler control (see p.101). System is available in two versions: with discrete or smooth adjustment of the coolant temperature.

Main Characteristics

System is comprised of the following components:

- Automation and control cabinet ШАУН-В-ГС (ShAUN-V-GS);
- Coolant immersion thermostat (in configuration with discrete temperature adjustment) or coolant temperature transducer (in configuration with smooth temperature adjustment).

ShAUN-V-GS maintains set coolant temperature by means of fan motors control as well as motor and automation circuits overload and short-circuit protection, and operation mode and alarm indication.

Coolant temperature is maintained by means of fans on/off switching (in case of discrete temperature adjustment) or regulation of the fan motors rotation speed using built-in variable frequency drive(in case of smooth temperature adjustment).

Functionality

Control system provides the following standard functionality:

- Manual startup and shut down of fan using ShAUN-V-GS;
- Remote startup and shut down using external terminal;
- Fan motor control and protection;
- System operation monitoring.

Connection Diagram

ШАУН-В-ГС-380-1 (ShAUN-V-GS-380-1) with Discrete Adjustment Connection Diagram

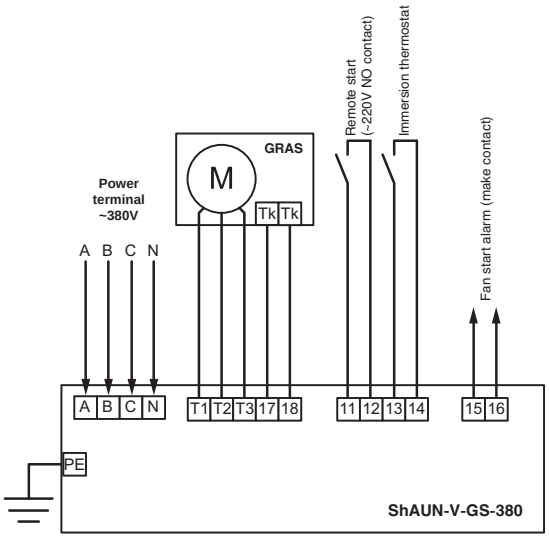

ШАУН-В-ГС-380-1 (ShAUN-V-GS-380-1) with Smooth Adjustment Connection Diagram

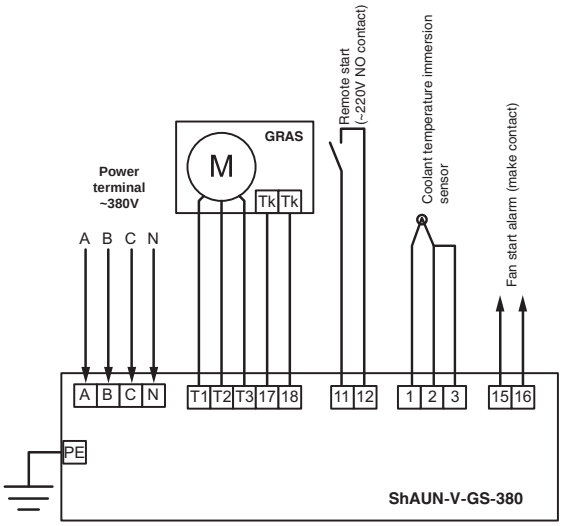

Example of reference designation:
ШАУН-В-ГС-380-1-1x2x1,1-IP40 ТУ 3430-023-64600223-2011, where:
ШАУН-В-ГС – Dry cooler control cabinet;
380 – Power supply voltage is 380V;
1 – One section of GRAS;
1x2x1,1 – One section of GRAS comprising two fans with power of 1.1kW per fan;
IP40 – Protection against small solid objects;
ТУ – Designation of specification.

ШАУН-В-ГС-380-3-3x2x1,5-3x005H-P40 ТУ 3430-023-64600223-2011, where:
ШАУН-В-ГС – Dry cooler control cabinet;
380 – Power supply voltage is 380V;
3 – Three GRAS sections;
3x2x1,5 – Three GRAS sections, each section is equipped with two fans with power of 1.5kW per fan;
3x005H – Three built-in variable frequency drives E3-9100-005H;
IP40 – Protection against small solid objects;
ТУ – Designation of specification.

Application

The system is designed for control of air curtains with water-to-air heat exchanger.

Main Characteristics

The control system includes the following components:

- Control cabinet ШАУЗ-В (ShAUZ-V);
- Adjusting valve with electric drive;
- Return water temperature regulator – one for each heat exchanger;
- Room air temperature regulator (shut-down delay);
- Terminal switch.

Functions

A standard control system provides the following functions:

- Manual air curtain start-up and shut-down using ШАУЗ-В (ShAUZ-V);
- Remote start-up and shut-down using external contact (Terminal switch);
- Heat exchanger freezing protection;
- Control of adjusting valve drive for heating water in open/close mode (-220V);
- Fan motor control and protection (3 phases, -380V);
- Shut-down delay until reaching of set temperature in gateway area;
- Shutting down on a signal from fire alarm system (closing contact by default).

The following functions are optionally available:

- Control of circulation pump installed instead of the valve.

Control system of air curtains with water-to-air heat exchanger wiring diagram (1 motor connection option)

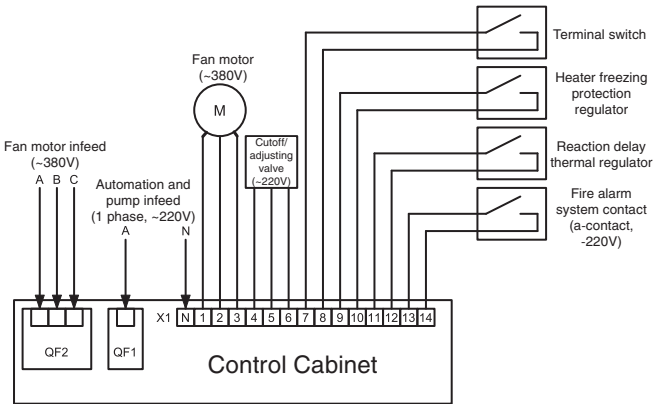

Control system of air curtains with water-to-air heat exchanger wiring diagram (2 motors connection option)

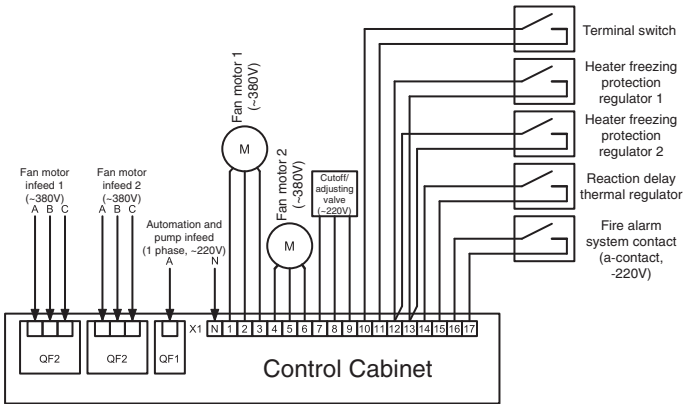

Hydraulic Piping Scheme for Air Curtain Heat Exchanger

Two system configurations with 2 racks for one gateway: heat exchangers shall be connected in parallel.

Hand operated valve is required for setting of minimum water flow rate in idle mode for the purpose of heat exchanger temperature maintaining and freezing protection. Flow rate is set upon system adjustment. Minimum flow rate may be set by means of stop (terminal position) setting on the drive. In that case hand operated valve is not required.

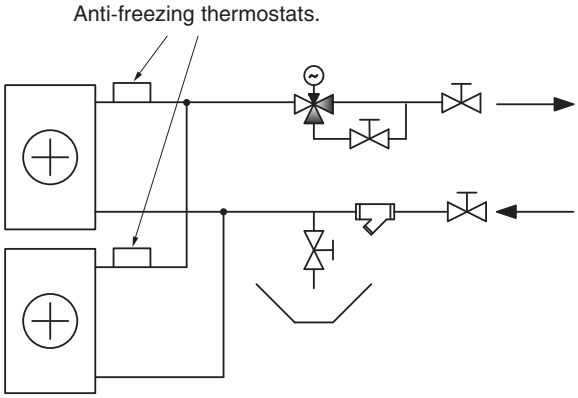

Example of reference designation:
ШАУЗ-В-380-2-2x1,5-IP54 ТУ 3430-023-64600223-2011, where:
ШАУЗ – Air Curtain Automatic Control Cabinet;
В – Water-heated air;
380 – Power supply voltage is 380V;
2 – Two operated devices (two air curtain sections);
2x1,5 – Fan power is 1.5kW per section;
IP54 – Protection against dust limited ingress and water sprayed from all directions;
ТУ – Designation of specification.

Designation

System is designed to control water-heated air curtains (see pp. 77-82).

Основные характеристики

Control system is comprised of the following components:

- Automation and control cabinet ШАУЗ-В-Мод (ShAUZ-V-Mod);
- Coolant control unit RUZ (see p.198);
- Return water thermostat;
- Room thermostat (shut down delay);
- Limit switch.

Casing material: impact-resistant self-extinguishing thermoplastic.
Overall dimensions: 300x410x153 mm.
Weight, max: 3.7kg.

Functionalit

Control system provides the following standard functionality:

- Manual startup and stop of air curtain with ШАУЗ-В-Мод (ShAUZ-V-Mod);
- Automatic startup and stop using external contact (limit switch);
- Fan motor control and protection (3 phases, ~380V);
- Heating water check valve actuator control in open/close mode (~220V);
- Unit heater freezing protection;
- Operating mode indication;
- Shut down delay until the specified temperature in the gate area is reached;
- Fire alarm actuated shut down (closing contact by default).

Water-heated air curtain control and automation cabinet connection diagram

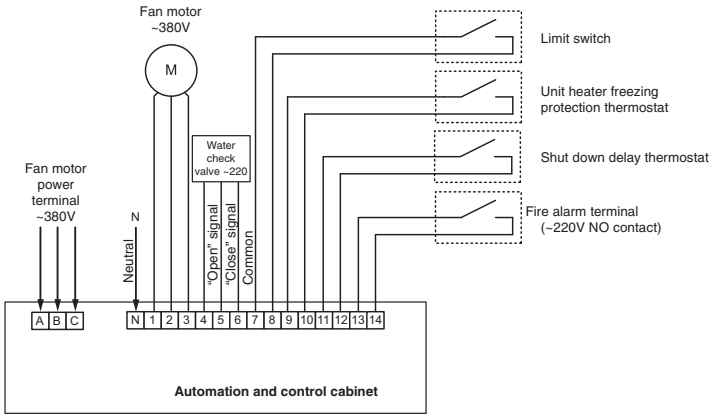

Example of reference designation:
ШАУЗ-В-Мод-380-1-1,1-IP55 ТУ 3430-023-64600223-2011, where:
ШАУЗ – Air Curtain Automatic Control Cabinet;
В – Water-heated air;
Мод – in a plastic modular casing;
380 – Power supply voltage is 380V;
1 – single operated device (single air curtain section);
1,1 – Fan power is 1.1kW per section;
IP55 – Protection against dust limited ingress and water sprayed from all directions;
ТУ – Designation of specification.

Application

The system is designed for control of air curtains with electric heat exchanger.

Main Characteristics

The control system includes the following components:

- Control cabinet ШАУЗ-Э (ShAUZ-E);
- Power cabinet ШС (ShS);
- Room air temperature regulator (shut-down delay);
- Terminal switch.

ШАУЗ-Э (ShAUZ-E) provides fan motor control, electric heat exchanger control using ШС (ShS), electric heat exchanger protection against overheating, as well as control circuits and fan motor circuits overloading and short circuit protection.

ШС (ShS) provides electric heat exchanger commutation and protection against overloading and short circuit.

Functions

A standard control system provides the following functions:

- Manual air curtain start-up and shut-down using ШАУЗ-Э (ShAUZ-E);
- Remote start-up and shut-down using external contact (Terminal switch);
- Electric heat exchanger protection against overheating;
- Fan motor control and protection (3 phases, -380V);
- Shut-down delay until reaching of set temperature in gateway area;
- Shutting down on a signal from fire alarm system (closing contact by default).

Control system of air curtains with electric heat exchangers wiring diagram (1 motor connection option)

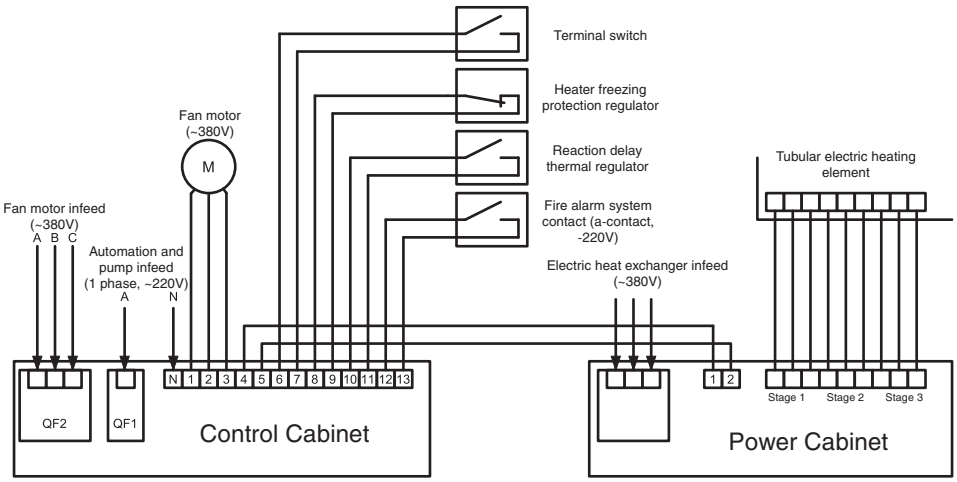

Example of reference designation:
ШАУЗ-Э-380-2-2x1,5-IP54 ТУ 3430-023-64600223-2011, where:
ШАУЗ – Air Curtain Automatic Control Cabinet;
Э – Electric air heating;
380 – Power supply voltage is 380V;
2 – Two operated devices (two air curtain sections);
2x1,5 – Fan power is 1.5kW per section;
IP54 – Protection against dust limited ingress and water sprayed from all directions;
ТУ – Designation of specification.

ШС-380-45-IP54 ТУ 3430-023-64600223-2011, where:
ШС – Power cubicle;
380 – Power supply voltage is 380V;
45 – Heating power is 45kW;
IP54 – Protection against dust limited ingress and water sprayed from all directions;
ТУ – Designation of specification.

Designation

PRUZ is designed for adjustment of heating water flow rate in heat-exchangers of air curtains and unit heaters (see p.195).

Composition

RUZ is comprised of the following components:
- ◆ Electrically actuated water three-way check valve;
- ◆ x2 lever-action ball valve;
- ◆ Strainer;
- ◆ Hand-operated water regulation valve;
- ◆ Air relief cock;
- ◆ Water drain cock;
- ◆ Pipe connections and fittings.

RUZ provides control of heating water flow through heat-exchanger and accordingly adjustment of air temperature at the outlet of heat-exchanger. Hand-operated regulation valve is used on bypass to setup coolant minimum flow through the heat-exchanger for temperature maintenance in the standby mode.

Functionality

CRUZ provides the following standard functionality:
- ◆ Opening and closing of the check valve using 3-position electric actuator (~220V);
- ◆ Maintenance of the air heater temperature and protection against freezing in standby mode;
- ◆ Inlet water treatment using strainer;
- ◆ Hand-operated blocking of the forward and return pipelines;
- ◆ Manual air drain;
- ◆ Manual water discharge.

Optionally:
- ◆ Installation of circulating pump instead of the check valve;
- ◆ Installation of additional thermal gages in the forward and return pipelines.

Specification

РУЗ 3-XX-1 (RUZ 3-XX-1)									
Control Unit Designation	Coolant			Valve Kvs	Connection dimensions G	Actuator			
	Maximum Flow Rate [m³/hours]	Maximum Operating Pressure [MPa]	Maximum Operating Temperature [°C]			Supply voltage [V]	Control		Torque [N/m]
РУЗ 3-1,0-X	0,6	1,0	130	1	1”	220	2-х поз.	0-10 В	4
РУЗ 3-2,5-X	1,7	1,0	130	2,5	1”	220	2-х поз.	0-10 В	4
РУЗ 3-4,0-X	2,5	1,0	130	4	1”	220	2-х поз.	0-10 В	4
РУЗ 3-6,3-X	3,5	1,0	130	6,3	1 ¼”	220	2-х поз.	0-10 В	4
РУЗ 3-8,0-X	4,5	1,0	130	8	1 ¼”	220	2-х поз.	0-10 В	4
РУЗ 3-17-X	9	1,0	110	17	1 ¼”	220	2-х поз.	0-10 В	4
РУЗ 3-24-X	14	1,0	110	24	1 ¼”	220	2-х поз.	0-10 В	4

Designation

RUN is designed for adjustment of heating water flow rate in heat-exchangers of air handling units and central air conditioners (see p.185 and p.189).

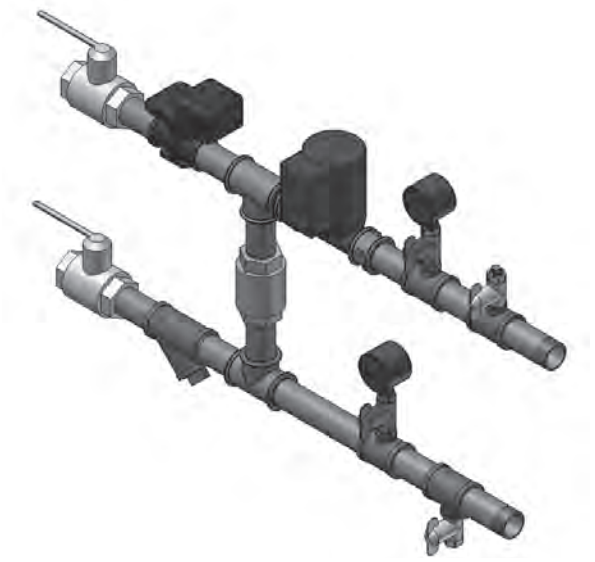

Composition

RUN is comprised of the following components:

- Electrically actuated water two-way check valve;
- Circulating pump;
- x2 lever-action ball valve;
- Back-flow valve;
- Strainer;
- x2 Thermal gage;
- Air relief cock;
- Water discharge cock;
- Pipe connections and fittings.

RUN provides control of heating water flow through heat-exchanger and accordingly adjustment of air temperature at the outlet of heat-exchanger.

Functionality

RUN provides the following standard functionality:

- Opening and closing of the check valve using 3-position electric actuator (~24V) or proportional electric drive (0-10V);
- Inlet water treatment using strainer;
- Hand-operated blocking of the forward and return pipelines;
- Measurement and indication of coolant pressure and temperature in forward and return pipelines;
- Manual air drain;
- Manual water discharge.

Specification

РУН-2-XX-1 (RUN-2-XX-1)									
Control Unit Designation	Coolant			Valve Kvs	Connection dimensions G	Actuator			
	Maximum Flow Rate [m³/hours]	Maximum Operating Pressure [MPa]	Maximum Operating Temperature [°C]			Supply voltage [V]	Control		Torque [N/m]
РУН-2-1,0-X	0,6	1,6	185	1,0	1”	~24В	3-х поз.	0-10В	6
РУН-2-1,6-X	1,0	1,6	185	1,6	1”	~24В	3-х поз.	0-10В	6
РУН-2-2,7-X	1,7	1,6	185	2,5	1”	~24В	3-х поз.	0-10В	6
РУН-2-4,2-X	2,2	1,6	185	4,0	1”	~24В	3-х поз.	0-10В	6
РУН-2-5,6-X	3,1	1,6	185	6,3	1 ¼”	~24В	3-х поз.	0-10В	6
РУН-2-10-X	5,5	1,6	185	12	1 ¼”	~24В	3-х поз.	0-10В	6
РУН-2-16-X	10	1,6	185	16	2”	~24В	3-х поз.	0-10В	6
РУН-2-27-X	15	1,6	185	24	2”	~24В	3-х поз.	0-10В	6
РУН-2-39-X	21	1,6	185	41	2 ½”	~24В	3-х поз.	0-10В	7

Designation

RUH is designed for adjustment of cold water flow rate in heat-exchangers of air handling units and central air conditioners (see p.189).

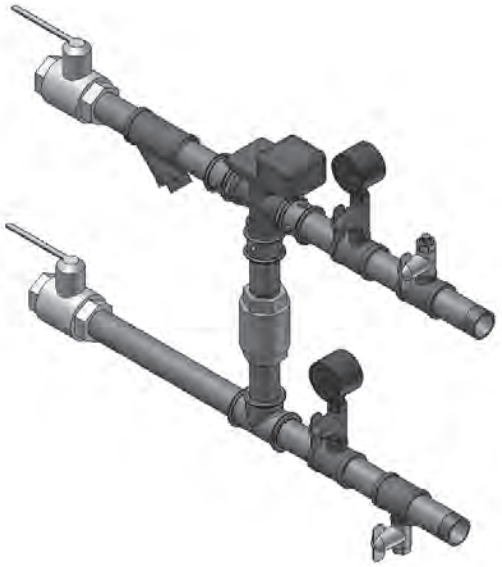

Composition

RUH is comprised of the following components:

- Electrically actuated water three-way check valve;
- x2 lever-action ball valve;
- Back-flow valve;
- Strainer;
- x2 Thermal gage;
- Air relief cock;
- Water discharge cock;
- Pipe connections and fittings.

RUH provides control of heating water flow through heat-exchanger and accordingly adjustment of air temperature at the outlet of heat-exchanger.

Functionality

RUH provides the following standard functionality:

- Opening and closing of the check valve using 3-position electric actuator (~24V) or proportional electric drive (0-10V);
- Inlet water treatment using strainer;
- Hand-operated blocking of the forward and return pipelines;
- Measurement and indication of coolant pressure and temperature in forward and return pipelines;
- Manual air drain;
- Manual water discharge.

Specification

РУХ-3-XX-1 (RUH-3-XX-1)									
Control Unit Designation	Coolant			Valve Kvs	Connection dimensions G	Actuator			
	Maximum Flow Rate [m³/hours]	Maximum Operating Pressure [MPa]	Maximum Operating Temperature [°C]			Supply voltage [V]	Control		Torque [N/m]
РУХ-3-8-X	5	1,0	185	8	1”	~24В	3-х поз.	0-10В	6
РУХ-3-15-X	9	1,0	185	15	1 ¼”	~24В	3-х поз.	0-10В	6
РУХ-3-17-X	12	1,0	185	17	2”	~24В	3-х поз.	0-10В	6
РУХ-3-24-X	17	1,0	185	24	2”	~24В	3-х поз.	0-10В	6
РУХ-3-31-X	21	1,0	185	31	2”	~24В	3-х поз.	0-10В	6
РУХ-3-41-X	29	1,0	185	41	2”	~24В	3-х поз.	0-10В	6
РУХ-3-63-X	36	1,0	185	63	2 ½”	~24В	3-х поз.	0-10В	6

APPENDICES

www.cvm.ru

ORDER FORM

for selection (manufacturing) of composite ventilation units AVS (SVAN)

1. **Customer (organization name):** _____
2. **Delivery, m³/h:** _____
3. **Free pressure, Pa:** _____
4. **Air temperature (t_{inlet}/t_{outlet}), °C:** _____/_____

5. Ventilation unit composition		Parameter values
Air valve	electrically operated	
	manually operated	
Receiving (mixing) unit	with one valve	
	with two valves	
One-stage filter	cleaning class	
Two-stage filter	cleaning class	
Water heater	water temperature (tinlet/ toutlet), °C	
Steam heater	steam pressure (P), MPa	
Electrical heater	maximum power, kW	
Fan unit	main	
	redundant	
Silencer	length, m	
Auxiliary silencer	length, m	
Air cooler	water	
	freon with condensing unit	
Intermediate chamber unit		
6. Optional equipment for ventilation unit		

7. Sketch of ventilation unit – operator side view with an indication of air flow direction and dimension limits

8. Contact person: _____

9. Telephone, fax: _____

CVM MANUFACTURING WORKS CO LTD
www.cvm.ru
43, Traktornaya str., Vladimir 600005, Russia
Tel./fax.: (495)975-93-59
E-mail: vladimir@cvm.ru
14, Dorogobuzhskaya str., Moscow, 121354, Russia
Tel./fax: (495)786-34-72
E-mail: info@cvm.ru

ORDER FORM

for selection (manufacturing) of attachment heating and ventilation units NOVA

1. Temperatures of:

– ambient air, °C: _____

– indoor air, °C: _____

– heat exchanger Tin/Tout, °C: _____

2. Heating capacity, kW _____

3. Exterior building volume, m^3 _____

4. Building type (underline as appropriate):

– with large fenestration Type 1

– general buildings Type 2

– buildings with improved heat insulation Type 3

5. Initial jet deflection angle, degrees

☐ – 0°
☐ – 30°
☐ – 45°
☐ – 60°
☐ – 90°

6. Customer (organization name): _____

7. Contact person, telephone: _____

CVM MANUFACTURING WORKS CO LTD
www.cvm.ru
43, Traktornaya str., Vladimir 600005, Russia
Tel./fax.: (495)975-93-59
E-mail: vladimir@cvm.ru
14, Dorogobuzhskaya str., Moscow, 121354, Russia
Tel./fax: (495)786-34-72
E-mail: info@cvm.ru

www.cvm.ru

ORDER FORM
for selection (manufacturing) of curtain

1. Curtain type: _____

2. Gate dimensions:

– width, m: _____

– height, m: _____

3. Number of equal size gates: _____

4. Curtain location:

above gates; sideways: one-side, two-side (underline as appropriate) _____

5. Temperatures of:

– ambient air, °C: _____

– indoor air, °C: _____

– air of jet end, °C: _____

6. Wind velocity, m/s: _____

7. Dimensional limits for curtain location:

– by height, m _____

– by inside width to the left, m _____

– by inside width to the right, m _____

8*. Aperture location in duct cross-section along the air flow direction (see figure):
right-hand, left-hand (underline as appropriate) _____

9*. Aperture location along the side of duct cross-section
short (S), long (L)** (underline as appropriate) _____

10*. Heat carrier:
water, steam, electricity (tubular electric heater), without heat carrier
(underline as appropriate) _____

11*. Maximum allowed power of electrical air heater, kW:

12*. Water temperature (inlet, outlet), °C: _____/_____

steam pressure, Pa _____

13. Customer (organization name): _____

14. Contact person, telephone: _____

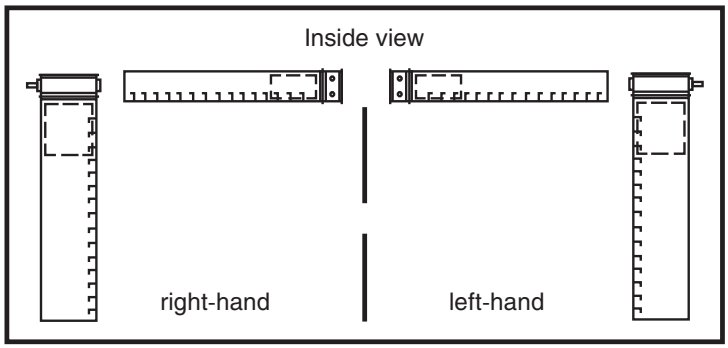

*) For ZVV only.
The following curtain version is possible on special order:
☐ with powder paint coating,
☐ with filter
**) In case of water air heater curtain location above gate L only.

CVM MANUFACTURING WORKS CO LTD
www.cvm.ru
43, Traktornaya str., Vladimir 600005, Russia
Tel./fax.: (495)975-93-59
E-mail: vladimir@cvm.ru
14, Dorogobuzhskaya str., Moscow, 121354, Russia
Tel./fax: (495)786-34-72
E-mail: info@cvm.ru

ORDER FORM

for the design and manufacturing of Central air conditioning systems KKTsM

Organization: _____ Object: _____
Contact person: _____ Object address: _____
Region (city): _____ _____
Tel./fax: _____ _____
E-mail: _____

MARK WHICHEVER APPLIES

Unit characteristics

System type: Number of system:_____ pcs.
Operator side: ☐ Other ☐ Left Utility connection side: ☐ Other ☐ Left
Delivery:

Conditioner composition (suction part)	Specification
Air inlet	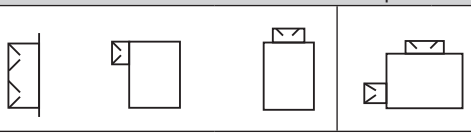 recirculation _____% T_{ai}=_____°C T_{ao}=_____°C d_{ai}=_____г/кг φ_{ao}=_____% **or** t_{mix}=_____°C φ_{mix}=_____%
Fan unit	Air flow rate, L=_____m³/hour Free pressure, _____Pa 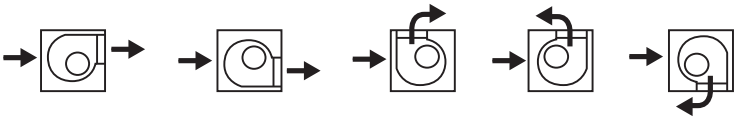
Standby fan	Air flow rate, L=_____m³/hour Free pressure, _____Pa 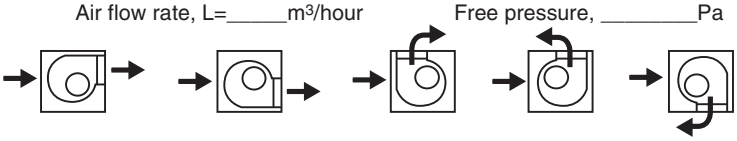

Filter units	Coarse cellular G3, G4 (flat, cellular)	Type		Class	
	Coarse and fine pocket G3…F9	Type		Class	
Liquid air heater unit	I heating	Air temperature t_{in}=_____°C t_{out}=_____°C	Heat carrier temperature t_{in}=_____°C t_{out}=_____°C	Capacity (optional) _____kW	Bypass channel control:
	II heating	t_{in}=_____°C t_{out}=_____°C	t_{in}=_____°C t_{out}=_____°C		
Steam air heater unit	I heating	t_{in}=_____°C t_{out}=_____°C	Steam temperature T_{st}=_____°C Steam pressure P_{st}=_____Pa	_____kW	
	II heating	t_{in}=_____°C t_{out}=_____°C	Steam temperature T_{st}=_____°C Steam pressure P_{st}=_____Pa	_____kW	
Electrical air heater unit	I heating	t_{in}=_____°C t_{out}=_____°C	____	_____kW	____
	II heating	t_{in}=_____°C t_{out}=_____°C	____	_____kW	____

Water air heater unit ☐ without droplet separator ☐ with droplet separator and tray	Air parameters t_{in}=_____°C t_{out}=_____°C I_n=_____°C I_k=_____°C φ_n=_____% φ_k=_____%	Coolant type _____ content _____%	Capacity _____kW
Freon air heater unit ☐ without droplet separator ☐ with droplet separator and tray	Air parameters t_{in}=_____°C t_{out}=_____°C I_n=_____°C I_k=_____°C φ_n=_____% φ_k=_____% Evaporation temperature _____°C Condensation temperature_____°C	Coolant type _____	Capacity _____kW

Waste heat recovery units	Recovery with intermediate heat carrier	Air parameters (cold period) T_{amb}=_____°C $T_{exhaust}$=_____°C φ_{amb}=_____% $\varphi_{exhaust}$=_____%		Coolant type _____ content _____%
		Air parameters (warm period) T_{amb}=_____°C $T_{exhaust}$=_____°C φ_{amb}=_____% $\varphi_{exhaust}$=_____%		Coolant type _____ content _____%

CVM MANUFACTURING WORKS CO LTD
www.cvm.ru
43, Traktornaya str., Vladimir 600005, Russia
Tel./fax.: (495)975-93-59
E-mail: vladimir@cvm.ru
14, Dorogobuzhskaya str., Moscow, 121354, Russia
Tel./fax: (495)786-34-72
E-mail: info@cvm.ru

www.cvm.ru

ORDER FORM

for the design and manufacturing of Central air conditioning systems KKTsM (continued)

Waste heat recovery units	Plate recuperator	Air parameters (cold period) T_{amb}=_____°C $T_{exhaust}$=_____°C φ_{amb}=_____% $\varphi_{exhaust}$=_____%	___
		Air parameters (warm period) T_{amb}=_____°C $T_{exhaust}$=_____°C φ_{amb}=_____% $\varphi_{exhaust}$=_____%	___
	Rotor recuperator	Air parameters (cold period) T_{amb}=_____°C $T_{exhaust}$=_____°C φ_{amb}=_____% $\varphi_{exhaust}$=_____%	___
		Air parameters (warm period) T_{amb}=_____°C $T_{exhaust}$=_____°C φ_{amb}=_____% $\varphi_{exhaust}$=_____%	___
Humidification units	Spray chamber unit	t_{init}=_____°C t_{end}=_____°C φ_{init}=_____% φ_{end}=_____% Adiabatic efficiency factor_____	Configuration:
	Honeycomb humidification unit	t_{init}=_____°C t_{end}=_____°C φ_{init}=_____% φ_{end}=_____%	
	Steam humidification unit	T_{init}=_____°C T_{con}=_____°C Pel.un.=_____кВт φ_{init}=_____% φ_{con}=_____% Gst=_____кг/час	
Silencer unit		Plate length (mm)	
Intermediate chamber unit ☐ with door ☐ with sight port		Length_____ mm 	
Outlet chamber		Exhaust	
Conditioner composition (exhaust part)		Specification	
Air inlet		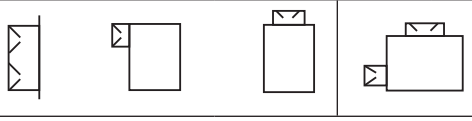 recirculation _____% T_{ai}=_____°C T_{ao}=_____°C d_{ai}=_____г/кг φ_{ao}=_____% **or** t_{mix}=_____°C φ_{mix}=_____%	
Fan unit		Air flow rate, L=_____m³/hour Free pressure, _____Pa 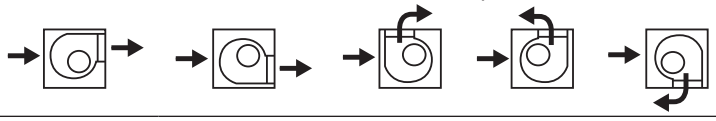	
Standby fan		Air flow rate, L=_____m³/hour Free pressure, _____Pa 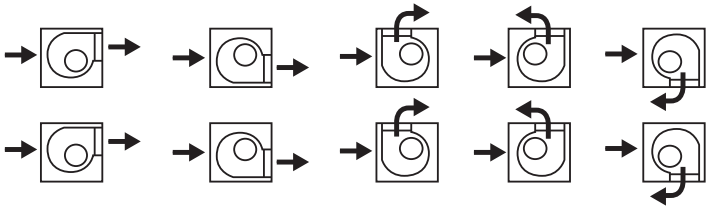	
Filter units	Coarse cellular G3, G4 (flat, cellular)	Type	Class
	Coarse and fine pocket G3…F9	Type	Class
Silencer unit		Plate length (mm)	
Intermediate chamber unit ☐ with door ☐ with sight port		Length_____ mm 	
Outlet chamber		Exhaust	
Automatics set			
Packaging			
Further Information			

CONDITIONER DIAGRAM (AIR HANDLING UNIT CHAMBER)

Signature:_____ (name in full)_____

Note: Customer is responsible for questionnaire filling in.

ORDER FORM

for selection of automatic control system of the air handling units

1. Customer (organization name): _____

2. Air handling unit composition: _____

2.1. Air valve:

☐ – manually operated

☐ – electrically operated: power supply ☐ ~220 V / ☐ ~24 V, drive type: _____

2.2. Filter:

☐ – without clogging control

☐ – with filter clogging control

Number of filters:_____ pcs.

2.3. Heater

☐ – water:

water flow rate Q, m^3/h:

heater hydraulic resistance $c1P_k$, kPa: _____

direct and return water temperatures: T_{dir}/T_{ret}, °C: _____/_____

inlet and outlet air temperature $t_{in.}/ t_{out.}$, °C _____/_____

water differential pressure $P_{dir.} / P_{ret.}$, kgf/cm^2 _____/_____

☐ – electrical:

power N, kW: _____

power supply voltage: ☐ 1-220 V/ ☐ 3-380 V

number and power of stages: _____

☐ – steam:

steam pressure P, kgf/cm^2: _____

steam temperature T_{st}, °C: _____

steam flow rate Q, kg/h: _____

2.4. Cooler

☐ – water:

water flow rate Q, m^3/h: _____

heater hydraulic resistance CP_k, kPa: _____

direct and return water temperatures: T_{dir}/T_{ret}, °C: _____/_____

inlet and outlet air temperature $t_{in.}/ t_{out.}$, °C _____/_____

water differential pressure $P_{dir.} / P_{ret.}$, kgf/cm^2 _____

☐ – freon

inlet and outlet air temperature $t_{in.}/ t_{out.}$, °C _____/_____

2.5. Fan

shaft power Ne, kW:

power supply voltage: ☐ 1-220 V/ ☐ 3-380 V

☐ – external rotor motor

☐ – general industrial induction motor

☐ – motor thermal switch availability and its type: O – bimetallic, O – thermistor

☐ – necessity of fan speed control

3. Optional components of air handling unit and their basic parameters:

_____

_____

_____

4. Control system optional functions (see catalog or TOR):

_____

_____

_____

_____

5. Contact person: _____

6. Telephone, fax, e-mail: _____

CVM MANUFACTURING WORKS CO LTD
www.cvm.ru
43, Traktornaya str., Vladimir 600005, Russia
Tel./fax.: (495)975-93-59
E-mail: vladimir@cvm.ru

14, Dorogobuzhskaya str., Moscow, 121354, Russia
Tel./fax: (495)786-34-72
E-mail: info@cvm.ru

www.cvm.ru

ORDER FORM
for manufacturing of heat exchanger

1. Customer (organization name) _____

2. Initial data for selection and manufacturing of heat exchanger

Initial data						Parameter values	
AIR		Flow rate LA, m^3/h					
		Temperature, t_{in} °C					
		Temperature, t_{out} °C					
		Barometric pressure P_b, mm Hg					
		* Enthalpy, kJ (desired)					
		* Relative humidity, %					
HEAT CARRIER		Heat carrier type (water, steam, freon, glycol mixtures (%) or other)					
		Flow rate GL (maximum), kg/h					
		Temperature, t_{in} °C					
		Temperature, t_{out} °C					
		** Inlet pressure, P_{bar}					
Power Q, kW							
Operation with regard to air flow direction:						right-hand	
						left-hand	
Overall and connection dimensions, mm							
b***		a		A		H****	
B		a1****		P****		L****	

*) for air coolers;
**) for steam heat exchangers;
***) divisible by 25 mm (for tube ☐9.52) and 50 mm (for tube ☐12.0);
****) dimensions are not mandatory if there are no connection strict requirements.

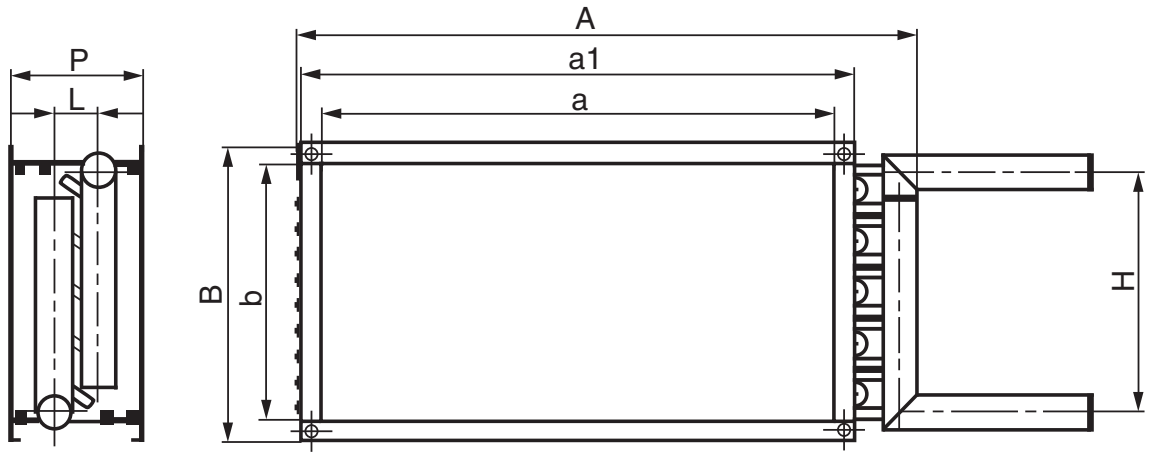

3. Contact person: _____

4. Telephone, fax: _____

CVM MANUFACTURING WORKS CO LTD
www.cvm.ru
43, Traktornaya str., Vladimir 600005, Russia
Tel./fax.: (495)975-93-59
E-mail: vladimir@cvm.ru
14, Dorogobuzhskaya str., Moscow, 121354, Russia
Tel./fax: (495)786-34-72
E-mail: info@cvm.ru

ORDER FORM
for selection (manufacturing) of dry cooler

Customer (organization name): _____

1. Required cooling capacity, kW _____

2. Coolant:

– water _____

– glycol solution (%) _____

– other medium (characteristics) _____

– flow rate, m^3/h. _____

– or kg/h. _____

– initial temperature, °C: _____

– end temperature, °C: _____

3. Ambient air parameters*:

– temperature, °C: _____

– relative humidity, %: _____

* Ambient air parameters for warm season of the year.

4. Maximum coolant pressure drop, kPa _____

5. Installation type

☐ horizontal

☐ vertical

☐ V-shaped

6. Dimension limits (if any), m _____

7. Options:

☐ High temperature protection (“Reversal” configuration)

☐ Protected construction (epoxidation)

☐ Vibration mounts

☐ Automatics set

☐ Fan explosion-proofness

Contact person: _____

Telephone, fax: _____

CVM MANUFACTURING WORKS CO LTD
www.cvm.ru
43, Traktornaya str., Vladimir 600005, Russia
Tel./fax.: (495)975-93-59
E-mail: vladimir@cvm.ru

14, Dorogobuzhskaya str., Moscow, 121354, Russia
Tel./fax: (495)786-34-72
E-mail: info@cvm.ru

Squirrel-Cage Induction Motors

Rated values of power, current, efficiency, and necessary motor fuses								
Power [kW]	cosφ	Efficiency [%]	230V		380V		660V	
			Thermal Relay	Circuit-Breaker	Thermal Relay	Circuit-Breaker	Thermal Relay	Circuit-Breaker
0.25	0.69	68	1.4	4	0.88	2	—	—
0.37	0.71	72	2.1	4	1.22	4	0.7	2
0.55	0.75	74	2.7	4	1.5	4	0.9	2
0.75	0.77	75	3.3	6	2	4	1.1	2
1.1	0.8	77	4.9	10	2.6	4	1.5	2
1.5	0.8	79	6.2	10	3.5	6	2	4
2.2	0.81	81	8.7	16	5	10	2.9	4
3	0.82	83	11.6	20	6.6	16	3.5	4
4	0.83	84.5	15.3	25	8.7	16	4.9	6
5.5	0.84	86	20.6	35	11.5	20	6.7	10
7.5	0.85	87	27.4	35	15.4	25	9	10
11	0.85	88	39.2	63	22	35	13	16
15	0.86	89	52.6	80	30	50	17.5	20
18.5	0.86	90	64.9	100	37	63	21	25
22	0.86	90.5	75.2	100	43	63	25	35
30	0.87	90.5	101	125	60	80	33	35
37	0.87	92.5	124	160	72	100	42	50
45	0.87	92.5	150	200	85	125	49	63
55	0.87	92.5	181	250	105	160	60	63
75	0.88	92	245	315	140	200	82	100
90	0.88	92.5	292	400	170	250	98	125
110	0.88	93	358	500	205	250	118	125
132	0.88	93.5	425	500	245	315	140	160
160	0.89	93.5	500	700	300	450	172	220
200	0.89	93.5	620	1,000	370	560	216	270
250	0.89	93.5	760	1,200	470	700	270	350
500	0.9	93.5	1,500	2,250	930	1,400	540	675

Note:
Above are recommended values.

IP Description

Solid Objects			Water		
1st Number	Degree of Protection	Description	2nd Number	Degree of Protection	Description
0	No protection	No protection against contact and ingress of objects	0	No protection against moisture	No protection
1	Protection against large solid objects	Protection against contact with large areas of the body, e.g. hands, and protection against solid objects with d > 50mm	1	Protection against dripping water	Protection against vertically falling drops of water
2	Protection against medium-sized solid objects	Protection against contact with fingers or solid objects with d > 12mm	2	Protection against dripping water	Protection against direct sprays of water up to 15° from the vertical
3	Protection against small solid objects	Protection against tools, wires, or similar solid objects with d > 2.5mm	3	Protection against spraying water	Protection against direct sprays of water up to 60° from the vertical
4	Protection against grain-sized solid objects	Protection against tools, wires, or similar solid objects with d > 1mm	4	Protection against splashing of water	Protection against water sprayed from all directions
5	Protection against adhering dust	Complete protection against contact. Protection against inner damage of equipment due to harmful deposit	5	Protection against water jets	Protection against low pressure jets of water from all directions
6	No ingress of dust	Complete protection against contact. No ingress of dust	6	Protection against powerful water jets	Protection against strong jets of water from all directions
			7	Protection against the effect of temporary immersion	Ingress of water in harmful quantity shall not be possible when the enclosure is immersed in water under defined conditions of pressure and time
			8	Protection against long periods of immersion	Ingress of water in harmful quantity shall not be possible when the enclosure is immersed in water for a long period of time

CVM MANUFACTURING WORKS equipment is installed and successfully operated on various sites and facilities:

- Space-launch complex Vostochniy, near Uglegorsk village, Amur Region
- Space-launch complex Plesetsk, Mirniy
- Moscow subway (Sokolnicheskaya, Kalininsko-Solntsevskaya, and Tagansko-Krasnopresnenskaya lines, Planernaya depot, Zyablikovo station lobby, etc.)
- Nizhny Novgorod subway (entrance on the leg between Moskovskaya and Gorkovskaya stations)
- Railway terminals: Yaroslavskiy, Leningradskiy, kazanskiy, Paveletskiy, Kievskiy
- Olympic Games facilities and infrastructure in Imereti lowland
- Nortgaz CJSC, Novy Urengoy
- “Volzhsky Utes” Health Resort, Samara Region, Shigony
- “Lokomotiv” Stadium, Moscow
- Business Center “Berlinskiy Dom”, Moscow
- Klinskiy Pivokombinat OJSC, Klin
- Motor transport base of the General Staff of the Ministry of Defense of the Russian Federation, Moscow
- Mosmart hypermarket on Dmitrovskoye highway, Moscow
- Administrative complex on the crossing of the 3rd Traffic Ring with Nizhegorodskaya street, Moscow
- Life-giving Trinity Church on Borisovskiye Lakes, Moscow
- Multifunctional Trade Center “Retail Park”, Moscow
- Chain stores “Kopeyka”, Moscow
- Residential compound on Derbenyevskaya pier, Moscow
- Prosecutor-General’s Office, Moscow
- High class residential building “Krylatskiye Holmy”, Moscow
- Ice hockey stadium on Khodynskoye Pole, Moscow
- Residential compound Kurkino, residential district 15, Moscow
- Arts and crafts center on Zorge street, Moscow
- Shopping mall “Mytischi Plaza”, Mytischi
- Electronics storehouse, Zelenograd
- Roadside servicing complex in Barvikha, Moscow Region
- Promburvod OJSC base, Moscow Region
- Car-maintenance depot, Vyazma
- Ladozhskiy terminal, Saint Petersburg
- Shopping mall “Zanevskiy Kaskad”, Saint Petersburg
- Shopping mall “Saturn”, Saint Petersburg
- Shopping mall “Merkuriy”, Saint Petersburg
- Shopping center “Lenta”, Saint Petersburg
- “Rodnik” distillery, Samara
- “Kolis” autocenter, Samara
- Residential compound on Lva Tolstogo street, Samara
- “Chistaya Voda” plant, Samara
- Residential building on Kommunisticheskaya-Dachnaya street, Samara
- Railway station, Chelyabinsk
- Oil-processing plant, Surgut
- Shopping complex “Park House”, Tolyatti
- Shopping complex “Koltso”, Kazan
- Next generation cars manufacturing plant, Kanash
- Airports in Ulyanovsk, Vladivostok, Nizhny Novgorod, and Krasnodar
- Ice hockey stadium, Sochi
- Thermal Power Plants in Perm, Nizhny Novgorod, and Krasnodar
- Pharmaceutical forms factory Er-Farm, Yaroslavl
- NAK Azot OJSC, Novomoskovsk
- and many others.

Production Site and Storage Location Map (approaching from Moscow)

Office and production site address: 43 Traktornaya street, Vladimir (territory of the OJSC “VMTZ” Tractor Plant)
Storehouse address in Vladimir: Storehouse No. 8, 5 Elektrozavodskaya street,
(territory of the Electric Motor Plant OJSC “VEMZ”)

Moscow Office Location Map

Moscow office address: 14, block 16, Dorogobuzhskaya street, Moscow

Balashiha Storage Facility Location Map

Storehouse address in Moscow Region: 36 Sovetskaya street, Balashiha

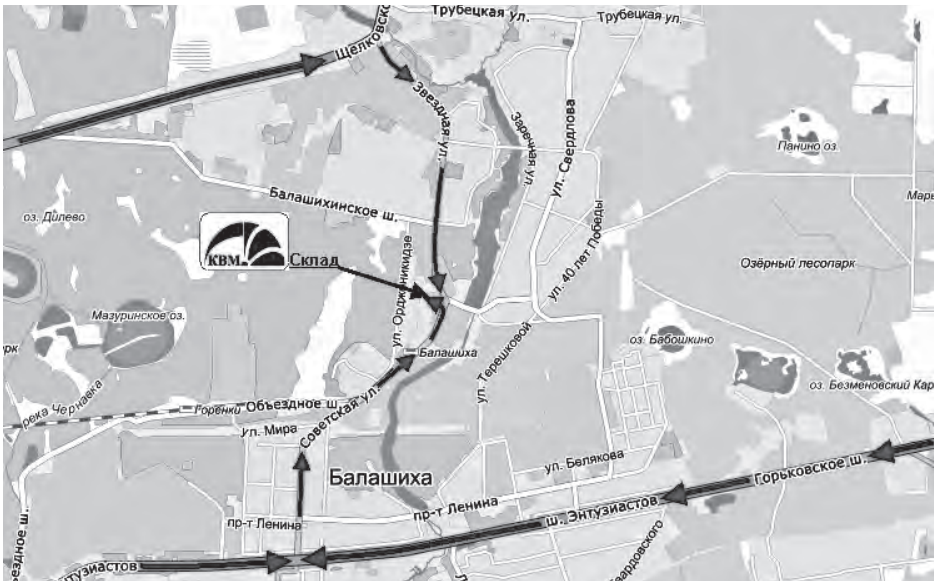

www.cvm.ru

Welcome to CVM Manufacturing Works!

Sales Department	Vladimir	Moscow
	43 Traktornaya street, Vladimir, 600005 Phone: +7(4922) 47 94 63 +7(495) 975 93 59 Fax: +7(4922) 47 94 66 e-mail: vladimir@cvm.ru	14, block 16, Dorogobuzhskaya street, Moscow, 121354 Phone: +7(495) 786 34 72 Fax: +7(495) 786 34 72 e-mail: info@cvm.ru
Manufacturing:	43 Traktornaya street, Vladimir, 600005 Phone: +7(4922) 47 94 63, e-mail: vladimir@cvm.ru	
Storage Facilities:	Vladimir	Balashiha, Moscow Region
	Storehouse No. 8, 5 Elektrozavodskaya street, (territory of the Electric Motor Plant OJSC “VEMZ”)	36 Sovetskaya street, Balashiha, Moscow Region

You can find all necessary information on our web-site **www.cvm.ru**

Notes